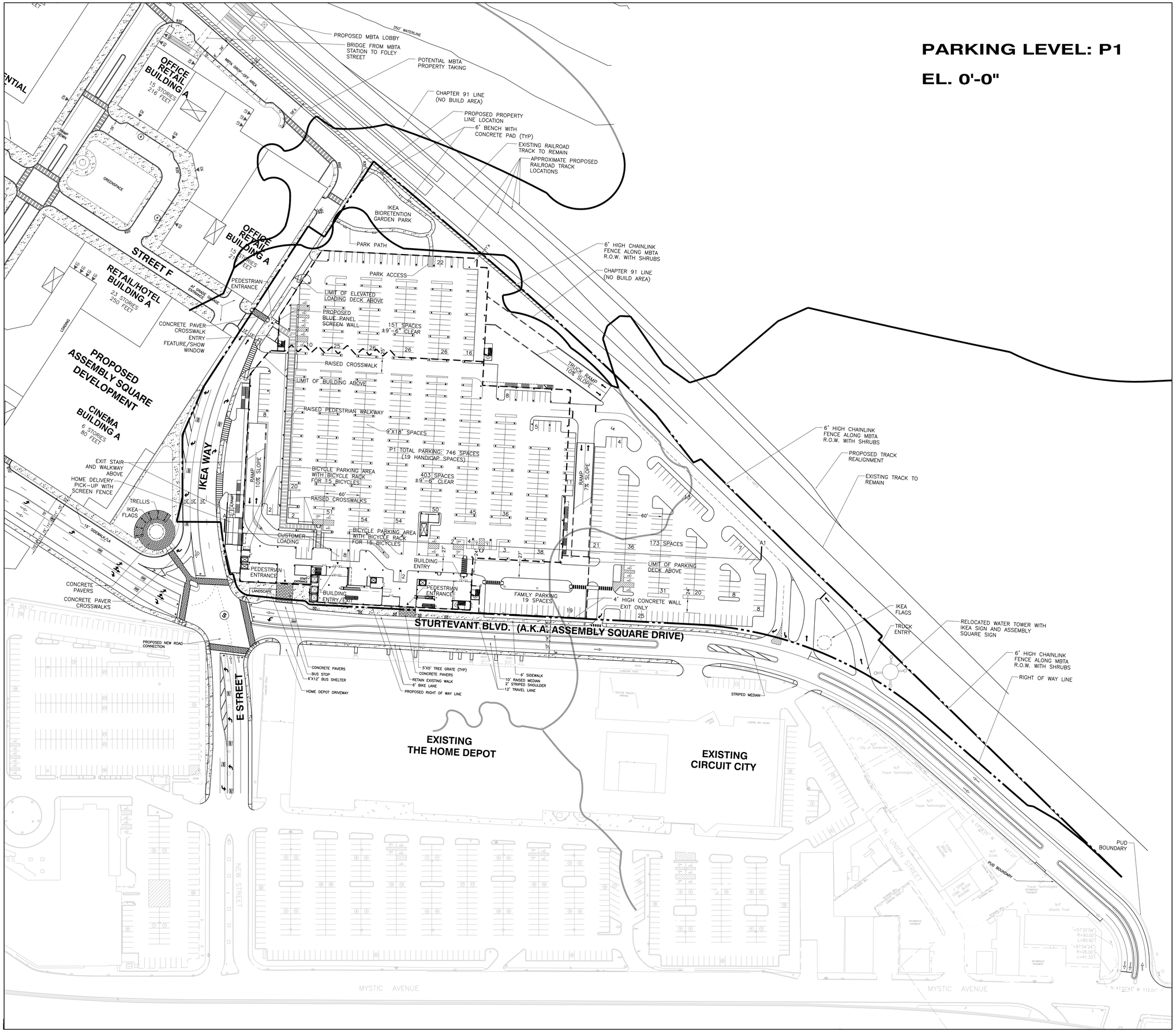

GreenbergFarrow

1755 The Exchange
Atlanta, GA 30339
t: 770 303 1033 f: 770 303 2333

PROJECT INFORMATION

SITE AREA

IKEA SITE	±11.93 ACRES

BUILDING AREA

IKEA	
ELEVATED STORE	305,975 SF
PARKING LEVEL: P1	±14,219 SF
PARKING LEVEL: P2	±6,252 SF
TOTAL	326,446 SF

*BUILDING AREA TO BE VERIFIED BY IKEA

PARKING SUMMARY

USER	RATIO REQUIRED	SPACES REQ'D	SPACES PROV'D
IKEA PARCEL	TBD		1,367
REGULAR SPACES PROVIDED			1,340
HANDICAP SPACES PROVIDED			27
PARKING RATIO PROVIDED (BASED ON ELEVATED STORE AREA ONLY)		4.5 SP/1000 SF	
BICYCLE PARKING SPACES PROVIDED			30

ZONING CLASSIFICATION

JURISDICTION	CITY OF SOMERVILLE
EXISTING ZONING	TBV
REQUIRED ZONING	TBV

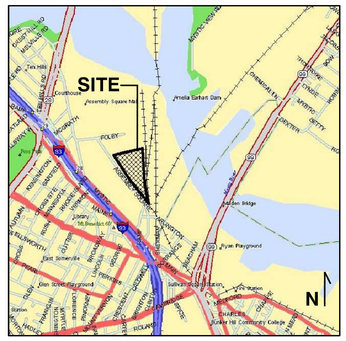

LOCATION MAP

PROJECT NOTES

1. THIS CONCEPTUAL SITE PLAN IS FOR PLANNING PURPOSES ONLY: SITE SPECIFIC INFORMATION SUCH AS EXISTING CONDITIONS, ZONING, PARKING LANDSCAPE REQUIREMENTS MUST BE VERIFIED.
2. THIS SITE PLAN IS BASED ON CIVIL PLANS PROVIDED BY VHB AND FLOOR PLANS PROVIDED BY IKEA.
3. ALL CURB CUTS AND TRAFFIC SIGNALS SHOWN, EXISTING AND PROPOSED, MUST BE VERIFIED.

DRAWING ISSUE/REVISION RECORD

DATE	NARRATIVE	INITIALS
01/20/06	INITIAL RELEASE	LJP
04/20/07	REVISE PROPERTY LINE PER VHB	CZ
05/14/07	ADD PED. WALKWAYS, REV. PKG & HD LOADING	LJP
06/25/07	ADD ENTRY FEATR., REV. PER VHB	LJP
07/09/07	REVISE HC SPACES AND BICYCLE PARKING	LJP
07/17/07	REV. PER CITY COMMENTS & IKEA FLR. PLANS	LJP

SITE PLANNER	CHENGYE ZHAO
SITE DEV. COORDINATOR	NELSON CABREL

IKEA

SOMERVILLE MA
I-93 & STURTEVANT BLVD.

GFA PROJECT NUMBER 20060052.2

SCALE: 1"=60'-0"

30 0 30 60 120 180 240

IKEA MA-2n.1.3

Drawing Name: P:\20060\20060052\211 Site Planning\Data\IKEA MA-2n_PRELIM.dwg Last Modified: Jul 17, 2007 – 4:16pm Plotted on: Jul 17, 2007 – 5:44pm by lpitmo

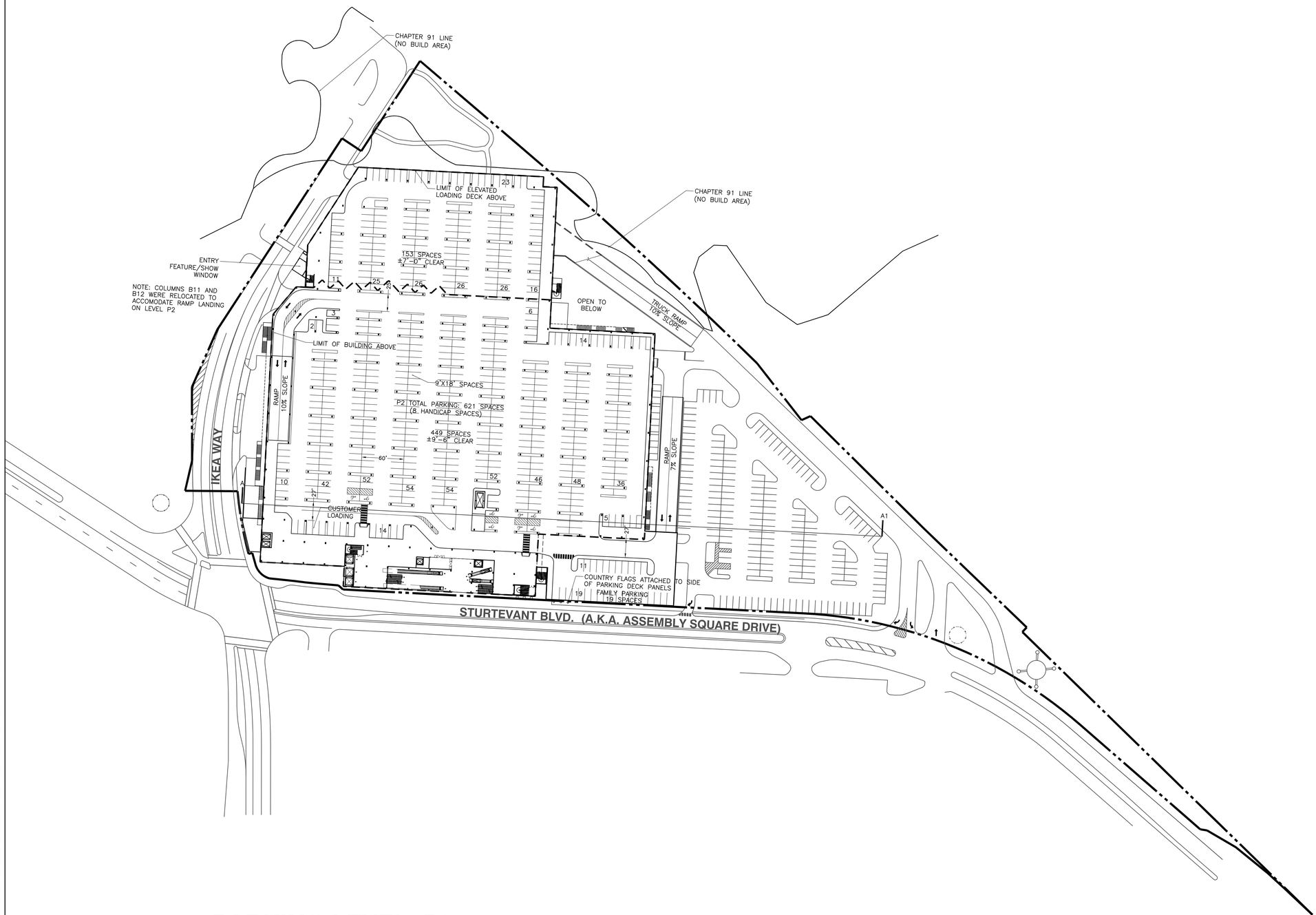

PARKING LEVEL: P2

EL. 13'-0"

GreenbergFarrow
1755 The Exchange
Atlanta, GA 30339
t: 770 303 1033 f: 770 303 2333

PROJECT NOTES

1. THIS CONCEPTUAL SITE PLAN IS FOR PLANNING PURPOSES ONLY: SITE SPECIFIC INFORMATION SUCH AS EXISTING CONDITIONS, ZONING, PARKING LANDSCAPE REQUIREMENTS MUST BE VERIFIED.
2. THIS SITE PLAN IS BASED ON CIVIL PLANS PROVIDED BY VHB AND FLOOR PLANS PROVIDED BY IKEA.
3. ALL CURB CUTS AND TRAFFIC SIGNALS SHOWN, EXISTING AND PROPOSED, MUST BE VERIFIED.

DRAWING ISSUE/REVISION RECORD

DATE	NARRATIVE	INITIALS
01/20/06	INITIAL RELEASE	LJP
04/20/07	REVISE PROPERTY LINE PER VHB	CZ
05/11/07	ADD PED. WALKWAYS, REV. PKG & HD LOADING	LJP
06/25/07	ADD ENTRY FEATR., REV. PER VHB	LJP
07/09/07	REVISE HC SPACES AND BICYCLE PARKING	LJP
07/17/07	REV. PER CITY COMMENTS & IKEA FLR. PLANS	LJP

SITE PLANNER CHENGYE ZHAO
SITE DEV. COORDINATOR NELSON CABREL

IKEA

SOMERVILLE
MA
I-93
& STURTEVANT BLVD.

GFA PROJECT NUMBER **20060052.2**

SCALE: 1"=60'-0"

30 0 30 60 120 180 240

IKEA MA-2n.2.3

Drawing Name: P:\2006\20060052\211 Site Planning\Site\IKEA MA-2n_PRELIM.dwg Last Modified: Jul 17, 2007 – 4:16pm Plotted on: Jul 17, 2007 – 5:48pm by lpittino

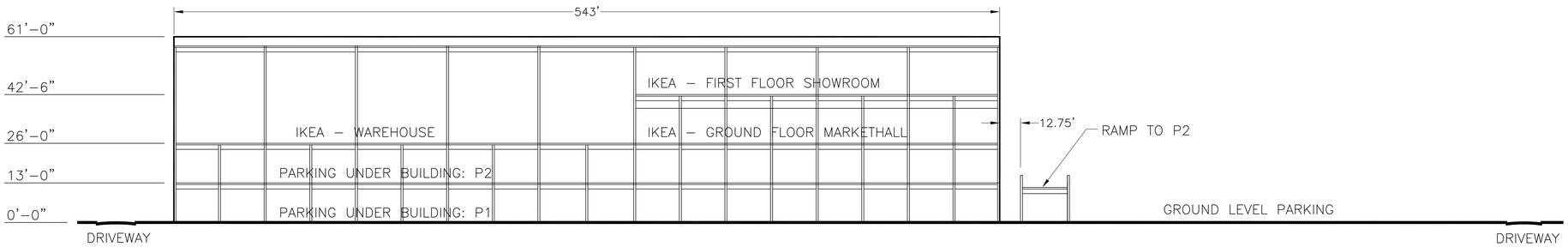

SITE SECTION A-A1

NOT TO SCALE

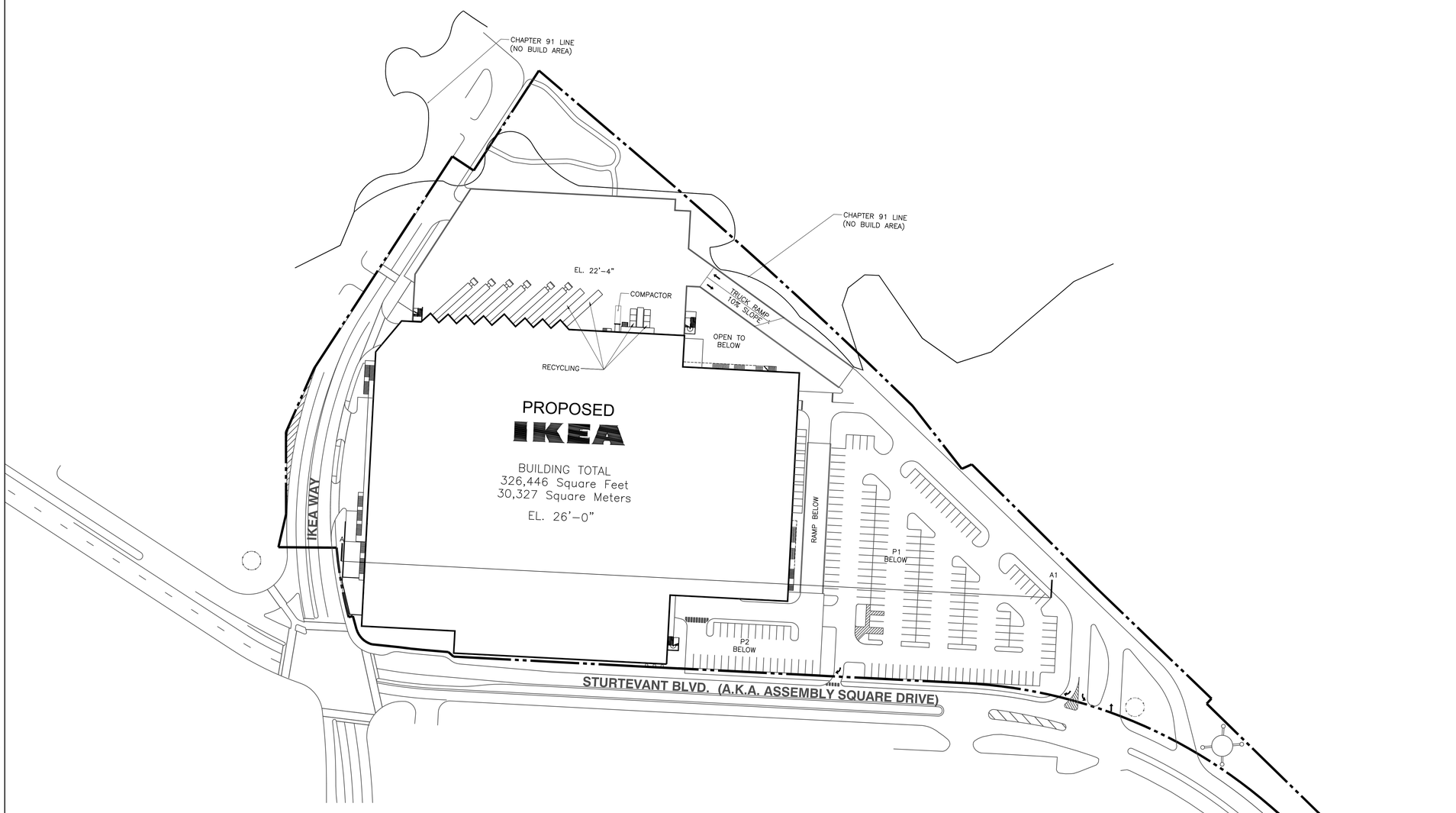

GROUND LEVEL BUILDING PLAN

EL. 26'-0"

GreenbergFarrow
1755 The Exchange
Atlanta, GA 30339
t: 770 303 1033 f: 770 303 2333

PROJECT NOTES

1. THIS CONCEPTUAL SITE PLAN IS FOR PLANNING PURPOSES ONLY: SITE SPECIFIC INFORMATION SUCH AS EXISTING CONDITIONS, ZONING, PARKING LANDSCAPE REQUIREMENTS MUST BE VERIFIED.
2. THIS SITE PLAN IS BASED ON CIVIL PLANS PROVIDED BY VHB AND FLOOR PLANS PROVIDED BY IKEA.
3. ALL CURB CUTS AND TRAFFIC SIGNALS SHOWN, EXISTING AND PROPOSED, MUST BE VERIFIED.

DRAWING ISSUE/REVISION RECORD

DATE	NARRATIVE	INITIALS
01/20/06	INITIAL RELEASE	LJP
04/20/07	REVISE PROPERTY LINE PER VHB	CZ
05/14/07	ADD PED. WALKWAYS, REV. PKG & HD LOADING	LJP
06/25/07	ADD ENTRY FEATR., REV. PER VHB	LJP
07/09/07	REVISE HC SPACES AND BICYCLE PARKING	LJP
07/17/07	REV. PER CITY COMMENTS & IKEA FLR. PLANS	LJP

SITE PLANNER CHENGYE ZHAO
SITE DEV. COORDINATOR NELSON CABREL

IKEA

SOMERVILLE
MA
I-93
& STURTEVANT BLVD.

GFA PROJECT NUMBER **20060052.2**

SCALE: 1"=60'-0"
30 0 30 60 120 180 240

IKEA MA-2n.3.3

Drawing Name: P:\2006\20060052\211 Site Planning\Site\IKEA MA-2n_PRELIM.dwg Last Modified: Jul 17, 2007 – 4:16pm Plotted on: Jul 17, 2007 – 5:46pm by lpitmo

VHB
Vanasse Hangen Brustlin, Inc.
Transportation
Land Development
Environmental Services

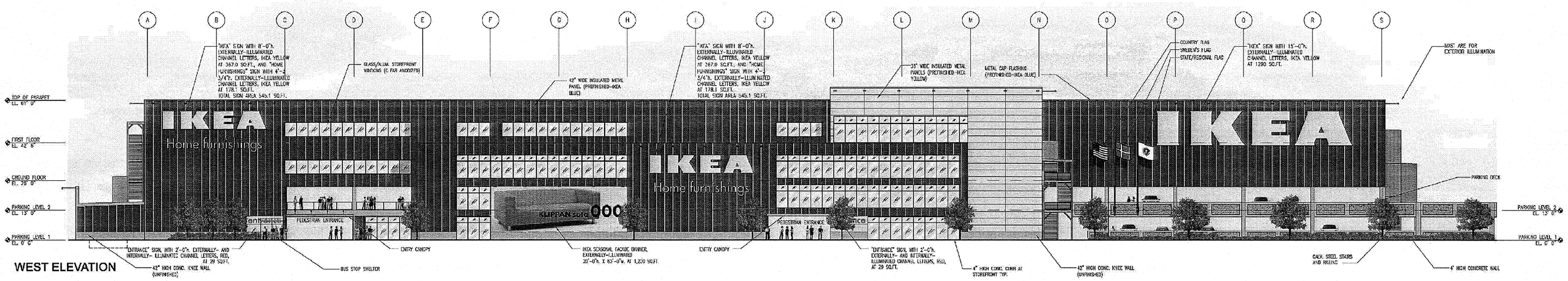

WEST ELEVATION

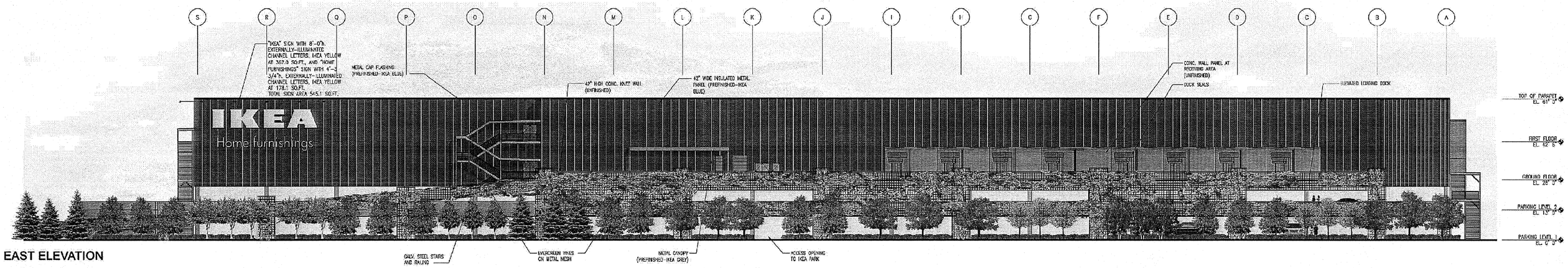

EAST ELEVATION

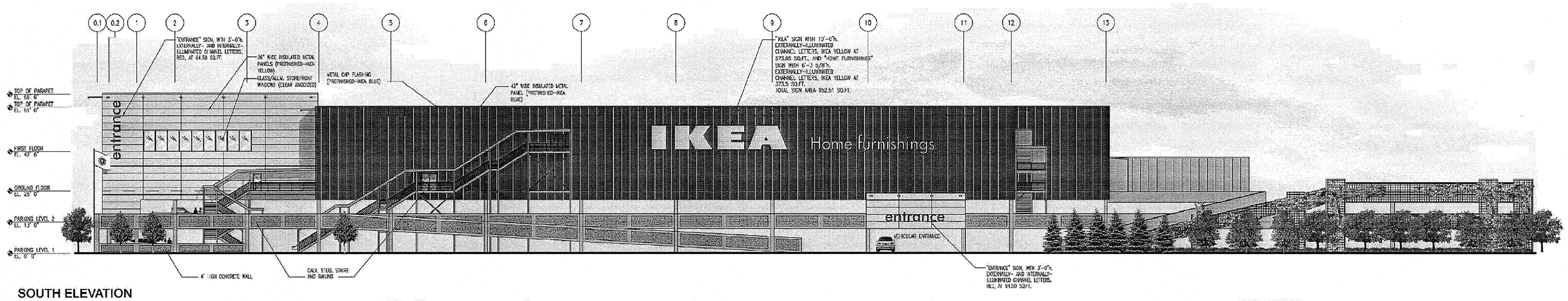

SOUTH ELEVATION

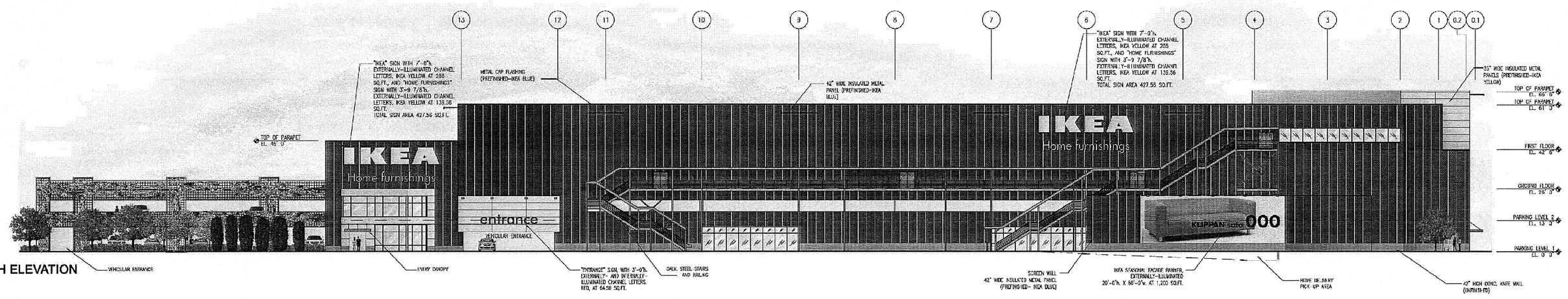

NORTH ELEVATION

No.	Revision	Date	Appvd.

Designed by | Drawn by | Checked by
CAD checked by | Approved by
Scale N.T.S. | Date July 20, 2007

Project Title
Phase 1-AA
IKEA
Assembly Square Drive
Somerville, Massachusetts

Issued for
Not Approved for Construction

Drawing Title
IKEA Building Elevations

GreenbergFarrow
1755 The Exchange
Atlanta, GA 30339
t: 770 303 1033 f: 770 303 2333

IKEA
SOMERVILLE, MASSACHUSETTS
200600522

ELEVATIONS
SCALE: 1" = 20'-0"
07/17/2007

Drawing Number
A-1

Sheet 1 of 1

Project Number
08518.03

REFERENCE

Site Plans

Issued for: **Final Level PUD Approval**

Date Issued: July 20, 2007

Latest Issue: July 20, 2007

Index

No.	Drawing Title	Latest Issue
C-1	Legend and General Notes	7/20/07
C-2	Neighborhood Context Map 1	7/20/07
C-3	Neighborhood Context Map 2	7/20/07
C-4	Overall Site Plan 1	7/20/07
C-5	Overall Site Plan 2	7/20/07
C-6	Layout and Materials Plan	7/20/07
C-7	Grading, Drainage and Erosion Control Plan	7/20/07
C-8	Utility Plan	7/20/07
C-9	Landscape Plan	7/20/07
C-10	Detail Sheet 1	7/20/07
C-11	Detail Sheet 2	7/20/07
C-12	Detail Sheet 3	7/20/07
	Reference Drawings	
SV-1	Existing Conditions Plan of Land	7/20/07
SV-2	Existing Conditions Plan of Land	7/20/07
SV-3	Existing Conditions Plan of Land	7/20/07
SV-4	Existing Conditions Plan of Land	7/20/07
SV-5	Existing Conditions Plan of Land	7/20/07
SL-1	Site Lighting Plan	5/2/07
A-1	IKEA Building Elevations	7/20/07
1.3	Parking Level: P1	7/17/07
2.3	Parking Level: P2	7/17/07
3.3	Ground Level Building Plan	7/17/07
I-I	Drain Profile Plan	5/28/03
	Bound Separately	
Phase 1-AA Roadway Improvement Project, Assembly Square Drive		7/20/07
Phase 1-AA Offsite Mitigation Project, Assembly Square		7/20/07
	Subdivision Plan of Land	7/20/07

Assembly Square Phase 1-AA

Assembly Square (IKEA & Assembly Square Drive) Somerville, Massachusetts

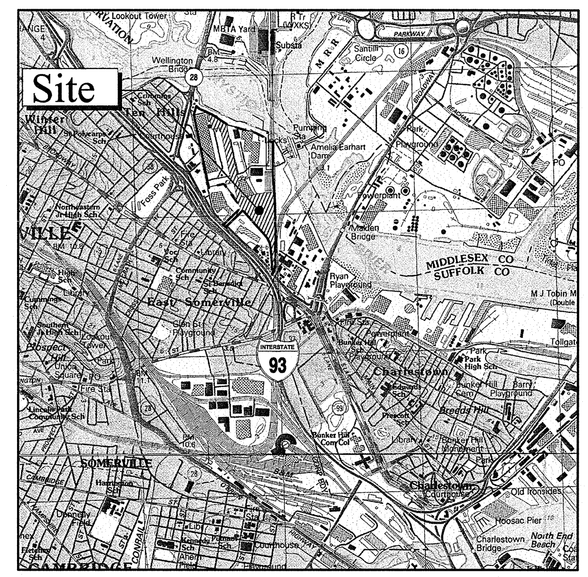

Site Location Map ↑ 0 1000 2000 Feet

Property Information

Federal Realty INVESTMENT TRUST

Owner/Applicant:
FR Sturtevant Street, LLC
1626 East Jefferson Street
Rockville, MD 20852
(P) 301-998-8100

Street-Works
Development & Consulting Group
A Division of PEG/Park LLC
30 Glenn Street
White Plains, NY 10603
914.949.6505

GreenbergFarrow
1755 The Exchange
Atlanta, GA 30339
t: 770 303 1033 f: 770 303 2333

GOODWIN | PROCTER
Goodwin Procter LLP
Exchange Place
53 State Street
Boston, MA 02109-2881
(P) 617-570-1000

COMMONWEALTH OF MASSACHUSETTS
KEVIN J. CRAMPWELL
CIVIL
No. 42874
REGISTERED PROFESSIONAL ENGINEER
7-20-07

VHB

Vanasse Hangen Brustlin, Inc.
Transportation
Land Development
Environmental Services

101 Walnut Street
Watertown, Massachusetts 02471
617 924 1770 · 617 924 2286

VHB Project No. 08518.03
Somerville, Massachusetts
Issued for: Final Level PUD Approval
Assembly Square Phase 1-AA- 7/20/2007

Legend

Exist. | Prop.

- PROPERTY LINE
- PROJECT LIMIT LINE
- RIGHT-OF-WAY/PROPERTY LINE
- EASEMENT
- BUILDING SETBACK
- BASELINE (10+00)
- CONSTRUCTION LAYOUT
- ZONING LINE
- TOWN LINE

- LIMIT OF DISTURBANCE
- WETLAND LINE WITH FLAG
- FLOODPLAIN
- BORDERING LAND SUBJECT TO FLOODING (BLSF)
- WETLAND BUFFER ZONE (BZ)
- NO DISTURB ZONE (NDZ)
- 200' RIVERFRONT AREA (200'RA)

- GRAVEL ROAD
- EDGE OF PAVEMENT (EOP)
- BITUMINOUS BERM (BB)
- BITUMINOUS CURB (BC)
- CONCRETE CURB (CC)
- CURB AND GUTTER (CG)
- EXTRUDED CONCRETE CURB (ECC)
- MONOLITHIC CONCRETE CURB (MCC)
- PRECAST CONC. CURB (PCC)
- SLOPED GRAN. EDGING (SGE)
- VERT. GRAN. CURB (VGC)
- LIMIT OF CURB TYPE
- SAWCUT

- BUILDING
- BUILDING ENTRANCE (EN)
- LOADING DOCK (LD)
- BOLLARD
- DUMPSTER PAD (D)
- SIGN
- DOUBLE SIGN

- STEEL GUARDRAIL
- WOOD GUARDRAIL

- PATH
- TREE LINE
- WIRE FENCE
- FENCE
- STOCKADE FENCE
- STONE WALL
- RETAINING WALL
- STREAM / POND / WATER COURSE
- DETENTION BASIN
- HAY BALES
- SILT FENCE

- MINOR CONTOUR (4)
- MAJOR CONTOUR (20)

- PARKING COUNT (10)
- COMPACT PARKING STALLS (C10)
- DOUBLE YELLOW LINE (DYL)
- STOP LINE (SL)
- CROSSWALK
- ACCESSIBLE CURB RAMP
- ACCESSIBLE PARKING
- VAN-ACCESSIBLE PARKING (VAN)

Exist. | Prop.

- CONCRETE
- HEAVY DUTY PAVEMENT
- RIPRAP
- CONSTRUCTION ENTRANCE

- TOP OF CURB ELEVATION (27.35 TC×)
- BOTTOM OF CURB ELEVATION (26.85 BC×)
- SPOT ELEVATION (132.75 ×)
- TOP & BOTTOM OF WALL ELEVATION (45.0 TW× 38.5 BW)
- BORING LOCATION
- TEST PIT LOCATION
- MONITORING WELL (MW)

- UNDERDRAIN (UD)
- DRAIN (12"D)
- ROOF DRAIN (6"RD)
- SEWER (12"S)
- FORCE MAIN (FM)
- OVERHEAD WIRE (OHW)
- WATER (6"W)
- FIRE PROTECTION (4"FP)
- DOMESTIC WATER (2"DW)
- GAS (3"G / G)
- ELECTRIC (E)
- STEAM (STM)
- TELEPHONE (T)
- FIRE ALARM (FA)
- CABLE TV (CATV)

- CATCH BASIN
- DOUBLE CATCH BASIN
- GUTTER INLET
- DRAIN MANHOLE
- TRENCH DRAIN (TD)
- PLUG OR CAP
- CLEANOUT (CO)
- FLARED END SECTION
- HEADWALL

- SEWER MANHOLE

- CURB STOP & BOX (CS)
- WATER VALVE & BOX (WV)
- TAPPING SLEEVE, VALVE & BOX (TSV)
- SIAMESE CONNECTION
- FIRE HYDRANT (HYD)
- WATER METER (WM)
- POST INDICATOR VALVE (PIV)
- WATER WELL

- GAS GATE (GG)
- GAS METER (GM)

- ELECTRIC MANHOLE (EMH)
- ELECTRIC METER (EM)
- LIGHT POLE
- TELEPHONE MANHOLE (TMH)
- TRANSFORMER PAD
- UTILITY POLE
- GUY POLE
- GUY WIRE & ANCHOR
- HAND HOLE (HH)
- PULL BOX (PB)

- MATCHLINE (Matchline)

Abbreviations

General

ABAN	ABANDON
ACR	ACCESSIBLE CURB RAMP
ADJ	ADJUST
APPROX	APPROXIMATE
BIT	BITUMINOUS
BS	BACK OF SIDEWALK
BWLL	BROKEN WHITE LANE LINE
CONC	CONCRETE
DYCL	DOUBLE YELLOW CENTER LINE
EL	ELEVATION
ELEV	ELEVATION
EXIST	EXISTING
FDN	FOUNDATION
FFE	FIRST FLOOR ELEVATION
GRAN	GRANITE
GTD	GRADE TO DRAIN
LA	LANDSCAPE AREA
LOD	LIMIT OF DISTURBANCE
MAX	MAXIMUM
MIN	MINIMUM
NIC	NOT IN CONTRACT
NTS	NOT TO SCALE
PERF	PERFORATED
PROP	PROPOSED
REM	REMOVE
RET	RETAIN
R&D	REMOVE AND DISPOSE
R&R	REMOVE AND RESET
SWEL	SOLID WHITE EDGE LINE
SWLL	SOLID WHITE LANE LINE
TS	TOP OF SLOPE
TYP	TYPICAL

Utility

CB	CATCH BASIN
CMP	CORRUGATED METAL PIPE
CO	CLEANOUT
DCB	DOUBLE CATCH BASIN
DMH	DRAIN MANHOLE
CIP	CAST IRON PIPE
COND	CONDUIT
DIP	DUCTILE IRON PIPE
FES	FLARED END SECTION
FM	FORCE MAIN
F&G	FRAME AND GRATE
F&C	FRAME AND COVER
GI	GUTTER INLET
GT	GREASE TRAP
HDPE	HIGH DENSITY POLYETHYLENE PIPE
HH	HANDHOLE
HW	HEADWALL
HYD	HYDRANT
INV	INVERT ELEVATION
I=	INVERT ELEVATION
LP	LIGHT POLE
MES	METAL END SECTION
PWW	PAVED WATER WAY
PVC	POLYVINYLCHLORIDE PIPE
RCP	REINFORCED CONCRETE PIPE
R=	RIM ELEVATION
SMH	SEWER MANHOLE
TSV	TAPPING SLEEVE, VALVE AND BOX
UG	UNDERGROUND
UP	UTILITY POLE

Notes:

General

1. CONTRACTOR SHALL NOTIFY "DIG-SAFE" (1-888-344-7233) AT LEAST 72 HOURS BEFORE EXCAVATING.
2. CONTRACTOR SHALL BE RESPONSIBLE FOR SITE SECURITY AND JOB SAFETY. CONSTRUCTION ACTIVITIES SHALL BE IN ACCORDANCE WITH OSHA STANDARDS AND LOCAL REQUIREMENTS.
3. ACCESSIBLE ROUTES, PARKING SPACES, RAMPS, SIDEWALKS AND WALKWAYS SHALL BE CONSTRUCTED IN CONFORMANCE WITH THE FEDERAL AMERICANS WITH DISABILITIES ACT AND WITH STATE AND LOCAL LAWS AND REGULATIONS (WHICHEVER ARE MORE STRINGENT).
4. AREAS DISTURBED DURING CONSTRUCTION AND NOT RESTORED WITH IMPERVIOUS SURFACES (BUILDINGS, PAVEMENTS, WALKS, ETC.) SHALL RECEIVE 6 INCHES LOAM AND SEED.
5. WITHIN THE LIMITS OF THE BUILDING FOOTPRINT, THE SITE CONTRACTOR SHALL PERFORM EARTHWORK OPERATIONS REQUIRED UP TO SUBGRADE ELEVATIONS.
6. WORK WITHIN THE LOCAL RIGHTS-OF-WAY SHALL CONFORM TO LOCAL MUNICIPAL STANDARDS. WORK WITHIN STATE RIGHTS-OF-WAY SHALL CONFORM TO THE LATEST EDITION OF THE STATE HIGHWAY DEPARTMENTS STANDARD SPECIFICATIONS FOR HIGHWAYS AND BRIDGES.
7. UPON AWARD OF CONTRACT, CONTRACTOR SHALL MAKE NECESSARY CONSTRUCTION NOTIFICATIONS AND APPLY FOR AND OBTAIN NECESSARY PERMITS, PAY FEES, AND POST BONDS ASSOCIATED WITH THE WORK INDICATED ON THE DRAWINGS, IN THE SPECIFICATIONS, AND IN THE CONTRACT DOCUMENTS. DO NOT CLOSE OR OBSTRUCT ROADWAYS, SIDEWALKS, AND FIRE HYDRANTS, WITHOUT APPROPRIATE PERMITS.
8. TRAFFIC SIGNAGE AND PAVEMENT MARKINGS SHALL CONFORM TO THE MANUAL OF UNIFORM TRAFFIC CONTROL DEVICES.
9. AREAS OUTSIDE THE LIMITS OF PROPOSED WORK DISTURBED BY THE CONTRACTOR'S OPERATIONS SHALL BE RESTORED BY THE CONTRACTOR TO THEIR ORIGINAL CONDITION AT THE CONTRACTOR'S EXPENSE.
10. IN THE EVENT THAT SUSPECTED CONTAMINATED SOIL, GROUNDWATER, AND OTHER MEDIA ARE ENCOUNTERED DURING EXCAVATION AND CONSTRUCTION ACTIVITIES BASED ON VISUAL, OLFACTORY, OR OTHER EVIDENCE, THE CONTRACTOR SHALL STOP WORK IN THE VICINITY OF THE SUSPECT MATERIAL TO AVOID FURTHER SPREADING OF THE MATERIAL, AND SHALL NOTIFY THE OWNER IMMEDIATELY SO THAT THE APPROPRIATE TESTING AND SUBSEQUENT ACTION CAN BE TAKEN.
11. CONTRACTOR SHALL PREVENT DUST, SEDIMENT, AND DEBRIS FROM EXITING THE SITE AND SHALL BE RESPONSIBLE FOR CLEANUP, REPAIRS AND CORRECTIVE ACTION IF SUCH OCCURS.
12. DAMAGE RESULTING FROM CONSTRUCTION LOADS SHALL BE REPAIRED BY THE CONTRACTOR AT NO ADDITIONAL COST TO OWNER.
13. CONTRACTOR SHALL CONTROL STORMWATER RUNOFF DURING CONSTRUCTION TO PREVENT ADVERSE IMPACTS TO OFF SITE AREAS, AND SHALL BE RESPONSIBLE TO REPAIR RESULTING DAMAGES, IF ANY, AT NO COST TO OWNER.
14. THIS PROJECT DISTURBS MORE THAN ONE ACRE OF LAND AND FALLS WITHIN THE NPDES CONSTRUCTION GENERAL PERMIT (CGP) PROGRAM AND EPA JURISDICTION. PRIOR TO THE START OF CONSTRUCTION CONTRACTOR IS TO FILE A CGP NOTICE OF INTENT WITH THE EPA AND PREPARE A STORMWATER POLLUTION PREVENTION PLAN IN ACCORDANCE WITH THE NPDES REGULATIONS. CONTRACTOR SHALL CONFIRM THE OWNER HAS ALSO FILED A NOTICE OF INTENT WITH THE EPA.

Utilities

1. THE LOCATIONS, SIZES, AND TYPES OF EXISTING UTILITIES ARE SHOWN AS AN APPROXIMATE REPRESENTATION ONLY. THE OWNER OR IT'S REPRESENTATIVE(S) HAVE NOT INDEPENDENTLY VERIFIED THIS INFORMATION AS SHOWN ON THE PLANS. THE UTILITY INFORMATION SHOWN DOES NOT GUARANTEE THE ACTUAL EXISTENCE, SERVICEABILITY, OR OTHER DATA CONCERNING THE UTILITIES, NOR DOES IT GUARANTEE AGAINST THE POSSIBILITY THAT ADDITIONAL UTILITIES MAY BE PRESENT THAT ARE NOT SHOWN ON THE PLANS. PRIOR TO ORDERING MATERIALS AND BEGINNING CONSTRUCTION, THE CONTRACTOR SHALL VERIFY AND DETERMINE THE EXACT LOCATIONS, SIZES, AND ELEVATIONS OF THE POINTS OF CONNECTIONS TO EXISTING UTILITIES AND, SHALL CONFIRM THAT THERE ARE NO INTERFERENCES WITH EXISTING UTILITIES AND THE PROPOSED UTILITY ROUTES, INCLUDING ROUTES WITHIN THE PUBLIC RIGHTS OF WAY.
2. WHERE AN EXISTING UTILITY IS FOUND TO CONFLICT WITH THE PROPOSED WORK, OR EXISTING CONDITIONS DIFFER FROM THOSE SHOWN SUCH THAT THE WORK CANNOT BE COMPLETED AS INTENDED, THE LOCATION, ELEVATION, AND SIZE OF THE UTILITY SHALL BE ACCURATELY DETERMINED WITHOUT DELAY BY THE CONTRACTOR, AND THE INFORMATION FURNISHED IN WRITING TO THE OWNER'S REPRESENTATIVE FOR THE RESOLUTION OF THE CONFLICT AND CONTRACTOR'S FAILURE TO NOTIFY PRIOR TO PERFORMING ADDITIONAL WORK RELEASES OWNER FROM OBLIGATIONS FOR ADDITIONAL PAYMENTS WHICH OTHERWISE MAY BE WARRANTED TO RESOLVE THE CONFLICT.
3. SET CATCH BASIN RIMS, AND INVERTS OF SEWERS, DRAINS, AND DITCHES IN ACCORDANCE WITH ELEVATIONS ON THE GRADING AND UTILITY PLANS.
4. RIM ELEVATIONS FOR DRAIN AND SEWER MANHOLES, WATER VALVE COVERS, GAS GATES, ELECTRIC AND TELEPHONE PULL BOXES, AND MANHOLES, AND OTHER SUCH ITEMS, ARE APPROXIMATE AND SHALL BE SET/RESET AS FOLLOWS:
   - A. PAVEMENTS AND CONCRETE SURFACES: FLUSH
   - B. ALL SURFACES ALONG ACCESSIBLE ROUTES: FLUSH
   - C. LANDSCAPE, LOAM AND SEED, AND OTHER EARTH SURFACE AREAS: ONE INCH ABOVE SURROUNDING AREA AND TAPER EARTH TO THE RIM ELEVATION.
5. THE LOCATION, SIZE, DEPTH, AND SPECIFICATIONS FOR CONSTRUCTION OF PROPOSED PRIVATE UTILITY SERVICES SHALL BE INSTALLED ACCORDING TO THE REQUIREMENTS PROVIDED BY, AND APPROVED BY, THE RESPECTIVE UTILITY COMPANY (GAS, TELEPHONE, ELECTRIC, FIRE ALARM, ETC.). FINAL DESIGN LOADS AND LOCATIONS TO BE COORDINATED WITH OWNER AND ARCHITECT.
6. CONTRACTOR SHALL MAKE ARRANGEMENTS FOR AND SHALL BE RESPONSIBLE FOR PAYING FEES FOR POLE RELOCATION AND FOR THE ALTERATION AND ADJUSTMENT OF GAS, ELECTRIC, TELEPHONE, FIRE ALARM, AND ANY OTHER PRIVATE UTILITIES, WHETHER WORK IS PERFORMED BY CONTRACTOR OR BY THE UTILITIES COMPANY.
7. UTILITY PIPE MATERIALS SHALL BE AS FOLLOWS, UNLESS OTHERWISE NOTED ON THE PLAN:
   - A. WATER PIPES SHALL BE POLYETHYLENE ENCASED, CEMENT LINED, DUCTILE IRON CLASS 52
   - B. SANITARY SEWER PIPES SHALL BE POLYVINYL CHLORIDE (PVC) SDR 35 SEWER PIPE
   - C. STORM DRAINAGE PIPES SHALL BE CONCRETE PIPE (RCP)
8. CONTRACTOR SHALL COORDINATE WITH ELECTRICAL CONTRACTOR AND SHALL FURNISH EXCAVATION, INSTALLATION, AND BACKFILL OF ELECTRICAL FURNISHED SITEWORK RELATED ITEMS SUCH AS PULL BOXES, CONDUITS, DUCT BANKS, LIGHT POLE BASES, AND CONCRETE PADS. SITE CONTRACTOR SHALL FURNISH CONCRETE ENCASEMENT OF DUCT BANKS IF REQUIRED BY THE UTILITY COMPANY AND AS INDICATED ON THE DRAWINGS.
9. CONTRACTOR SHALL EXCAVATE AND BACKFILL TRENCHES FOR GAS IN ACCORDANCE WITH GAS COMPANY'S REQUIREMENTS.
10. ALL DRAINAGE AND SANITARY STRUCTURE INTERIOR DIAMETERS (4' MIN.) SHALL BE DETERMINED BY THE MANUFACTURER BASED ON THE PIPE CONFIGURATIONS SHOWN ON THESE PLANS AND LOCAL MUNICIPAL STANDARDS. FOR MANHOLES THAT ARE 20 FEET IN DEPTH AND GREATER, THE MINIMUM DIAMETER SHALL BE 5 FEET.

Layout and Materials

1. DIMENSIONS ARE FROM THE FACE OF CURB, FACE OF BUILDING, FACE OF WALL, AND CENTER LINE OF PAVEMENT MARKINGS, UNLESS OTHERWISE NOTED.
2. CURB RADII ARE 3 FEET UNLESS OTHERWISE NOTED.
3. CURBING SHALL BE VERTICAL GRANITE CURB (VGC) WITHIN THE SITE UNLESS OTHERWISE INDICATED ON THE PLANS.
4. SEE ARCHITECTURAL DRAWINGS FOR EXACT BUILDING DIMENSIONS AND DETAILS CONTIGUOUS TO THE BUILDING, INCLUDING SIDEWALKS, RAMPS, BUILDING ENTRANCES, STAIRWAYS, UTILITY PENETRATIONS, CONCRETE DOOR PADS, COMPACTOR PAD, LOADING DOCKS, BOLLARDS, ETC.
5. PROPOSED BOUNDS AND ANY EXISTING PROPERTY LINE MONUMENTATION DISTURBED DURING CONSTRUCTION SHALL BE SET OR RESET BY A PROFESSIONAL LICENSED SURVEYOR.
6. PRIOR TO START OF CONSTRUCTION, CONTRACTOR SHALL VERIFY EXISTING PAVEMENT ELEVATIONS AT INTERFACE WITH PROPOSED PAVEMENTS, AND EXISTING GROUND ELEVATIONS ADJACENT TO DRAINAGE OUTLETS TO ASSURE PROPER TRANSITIONS BETWEEN EXISTING AND PROPOSED FACILITIES.
7. SYMBOLS AND LEGENDS OF PROJECT FEATURES ARE GRAPHIC REPRESENTATIONS AND ARE NOT NECESSARILY SCALED TO THEIR ACTUAL DIMENSIONS OR LOCATIONS ON THE DRAWINGS. THE CONTRACTOR SHALL REFER TO THE DETAIL SHEET DIMENSIONS, MANUFACTURERS' LITERATURE, SHOP DRAWINGS AND FIELD MEASUREMENTS OF SUPPLIED PRODUCTS FOR LAYOUT OF THE PROJECT FEATURES.
8. CONTRACTOR SHALL NOT RELY SOLELY ON ELECTRONIC VERSIONS OF PLANS, SPECIFICATIONS, AND DATA FILES THAT ARE OBTAINED FROM THE DESIGNERS, BUT SHALL VERIFY LOCATION OF PROJECT FEATURES IN ACCORDANCE WITH THE PAPER COPIES OF THE PLANS AND SPECIFICATIONS THAT ARE SUPPLIED AS PART OF THE CONTRACT DOCUMENTS.

Demolition

1. CONTRACTOR SHALL REMOVE AND DISPOSE OF EXISTING MANMADE SURFACE FEATURES WITHIN THE LIMIT OF WORK INCLUDING BUILDINGS, STRUCTURES, PAVEMENTS, SLABS, CURBING, FENCES, UTILITY POLES, SIGNS, ETC. UNLESS INDICATED OTHERWISE ON THE DRAWINGS. REMOVE AND DISPOSE OF EXISTING UTILITIES, FOUNDATIONS AND UNSUITABLE MATERIAL BENEATH AND FOR A DISTANCE OF 10 FEET BEYOND THE PROPOSED BUILDING FOOTPRINT INCLUDING EXTERIOR COLUMNS.
2. EXISTING UTILITIES SHALL BE TERMINATED, UNLESS OTHERWISE NOTED, IN CONFORMANCE WITH LOCAL, STATE AND INDIVIDUAL UTILITY COMPANY STANDARD SPECIFICATIONS AND DETAILS. THE CONTRACTOR SHALL COORDINATE UTILITY SERVICE DISCONNECTS WITH THE UTILITY REPRESENTATIVES.
3. CONTRACTOR SHALL DISPOSE OF DEMOLITION DEBRIS IN ACCORDANCE WITH APPLICABLE FEDERAL, STATE AND LOCAL REGULATIONS, ORDINANCES AND STATUTES.

Erosion Control

1. PRIOR TO STARTING ANY OTHER WORK ON THE SITE, THE CONTRACTOR SHALL NOTIFY APPROPRIATE AGENCIES AND SHALL INSTALL EROSION CONTROL MEASURES AS SHOWN ON THE PLANS AND AS IDENTIFIED IN FEDERAL, STATE, AND LOCAL APPROVAL DOCUMENTS PERTAINING TO THIS PROJECT.
2. CONTRACTOR SHALL INSPECT AND MAINTAIN EROSION CONTROL MEASURES, AND REMOVE SEDIMENT THEREFROM ON A WEEKLY BASIS AND WITHIN TWELVE HOURS AFTER EACH STORM EVENT AND DISPOSE OF SEDIMENTS IN AN UPLAND AREA SUCH THAT THEY DO NOT ENCUMBER OTHER DRAINAGE STRUCTURES AND PROTECTED AREAS.
3. CONTRACTOR SHALL BE FULLY RESPONSIBLE TO CONTROL CONSTRUCTION SUCH THAT SEDIMENTATION SHALL NOT AFFECT REGULATORY PROTECTED AREAS, WHETHER SUCH SEDIMENTATION IS CAUSED BY WATER, WIND, OR DIRECT DEPOSIT.
4. CONTRACTOR SHALL PERFORM CONSTRUCTION SEQUENCING SUCH THAT EARTH MATERIALS ARE EXPOSED FOR A MINIMUM OF TIME BEFORE THEY ARE COVERED, SEEDED, OR OTHERWISE STABILIZED TO PREVENT EROSION.
5. UPON COMPLETION OF CONSTRUCTION AND ESTABLISHMENT OF PERMANENT GROUND COVER, CONTRACTOR SHALL REMOVE AND DISPOSE OF EROSION CONTROL MEASURES AND CLEAN SEDIMENT AND DEBRIS FROM ENTIRE DRAINAGE AND SEWER SYSTEMS.

Existing Conditions Information

1. THE PROPERTY LINES SHOWN WERE DETERMINED BY AN ACTUAL FIELD SURVEY PERFORMED BY VANASSE HANGEN BRUSTLIN, INC. BETWEEN APRIL 2004 AND MARCH OF 2006 AND FROM DEEDS AND PLANS OF RECORD.

   THE EXISTING CONDITIONS SHOWN ON THIS PLAN ARE BASED UPON AN ACTUAL ON THE GROUND INSTRUMENT SURVEY PERFORMED BY VANASSE HANGEN BRUSTLIN, INC. IN APRIL OF 2004, UPDATED IN MARCH OF 2006, AS WELL AS A PLAN ENTITLED "AS BUILT PLAN OF LAND ASSEMBLY SQUARE MALL, SOMERVILLE, MA" BY DANA PERKINS, DATED SEPTEMBER 12, 1997, REVISED NOVEMBER 1, 1999.

   UNDERGROUND UTILITIES SHOWN ON THIS PLAN ARE BASED UPON FIELD OBSERVATIONS AND INFORMATION OF RECORD. THEY ARE NOT WARRANTED TO BE EXACT, NOR IS IT WARRANTED THAT ALL UNDERGROUND UTILITIES OR OTHER STRUCTURES ARE SHOWN ON THIS PLAN.
2. ELEVATIONS SHOWN ARE BASED UPON USCGS, NATIONAL GEODETIC VERTICAL DATUM OF 1929 AND WERE INITIATED AT BENCHMARK #11000, A MASSACHUSETTS GEODETIC SURVEY DISC.
3. THE LOCUS PROPERTY LIES WITHIN ZONE C, AREA OF MINIMAL FLOODING, AS SHOWN ON THE FLOOD INSURANCE RATE MAP FOR THE CITY SOMERVILLE, MASSACHUSETTS COMMUNITY PANEL NUMBER 250214 0001 B, EFFECTIVE DATE JULY 17, 1986.

VHB
Vanasse Hangen Brustlin, Inc.
Transportation
Land Development
Environmental Services
101 Walnut Street, P.O. Box 9151
Watertown, Massachusetts 02471
617 924 1770 â FAX 617 924 2286

No.	Revision	Date	Appvd.

Designed by | Drawn by | Checked by
CAD checked by | Approved by
Scale N.T.S. | Date July 20, 2007

Project Title
Phase 1-AA
IKEA
Assembly Square Drive
Somerville, Massachusetts

Issued for
Final Level PUD Approval

Not Approved for Construction

Drawing Title
Legend and General Notes

COMMONWEALTH OF MASSACHUSETTS KENDALL CARDWELL CIVIL No. 42674 REGISTERED PROFESSIONAL ENGINEER
7-20-07

Drawing Number
C-1
Sheet 2 of 13
Project Number 08518.03

08518.03-PHASE 1AA-LG.DWG

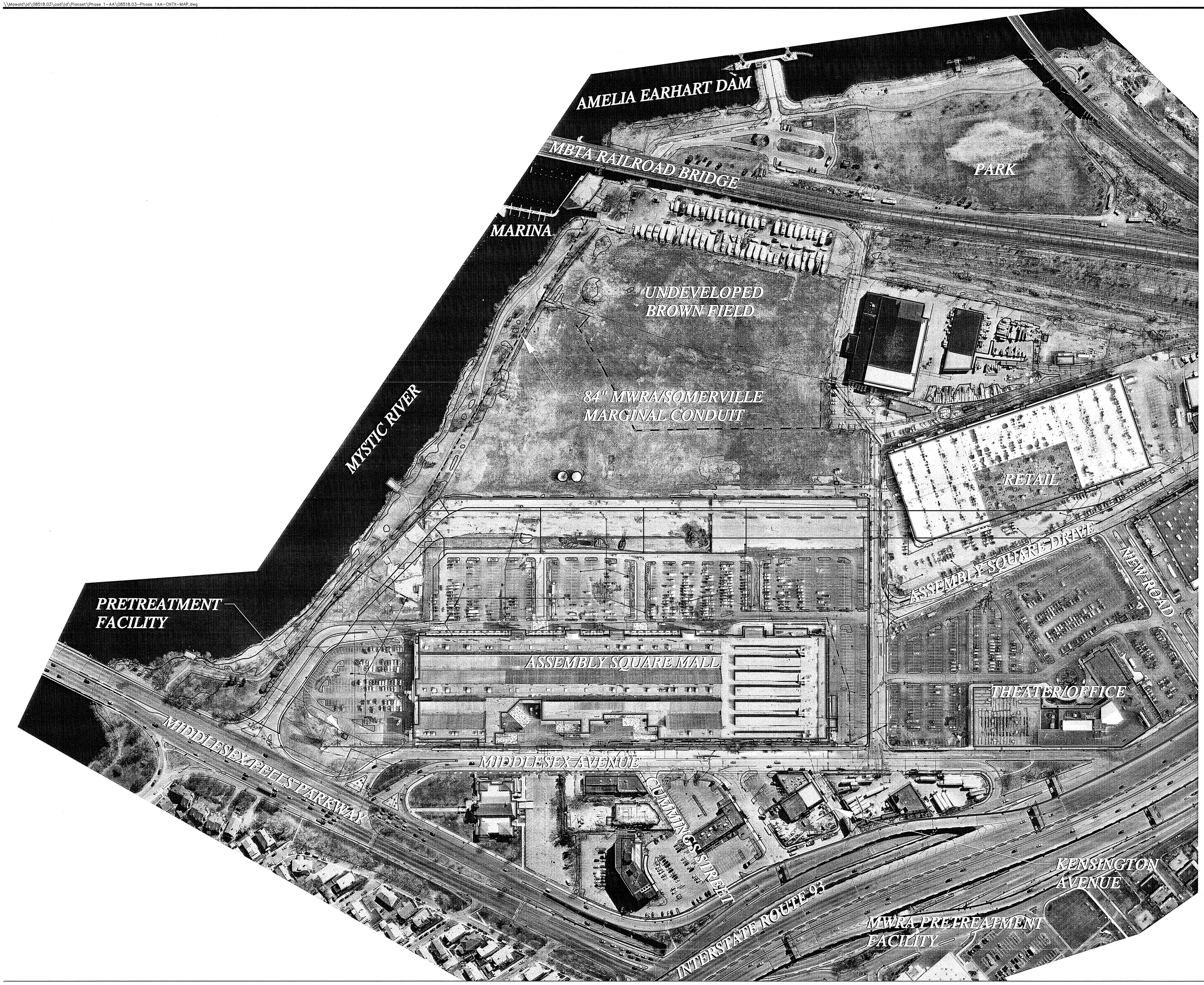

VHB
Vanasse Hangen Brustlin, Inc.

Transportation
Land Development
Environmental Services

101 Walnut Street, P.O. Box 9151
Watertown, Massachusetts 02471
617 924 1770 à FAX 617 924 2286

No.	Revision	Date	Appvd.

Designed by | Drawn by | Checked by
CAD checked by | Approved by
Scale 1"=100' | Date July 20, 2007

Project Title

Phase 1-AA
IKEA

Assembly Square Drive
Somerville, Massachusetts

Issued for

Final Level PUD Approval

Not Approved for Construction

Drawing Title

Neighborhood Context
Map 1

Drawing Number

C-2

Sheet 3 of 13

Project Number
08518.03

7-20-07

\\Mawald\ld\08518.03\cad\ld\Planset\Phase 1-AA\08518.03-Phase 1AA-CNTX-MAP.dwg

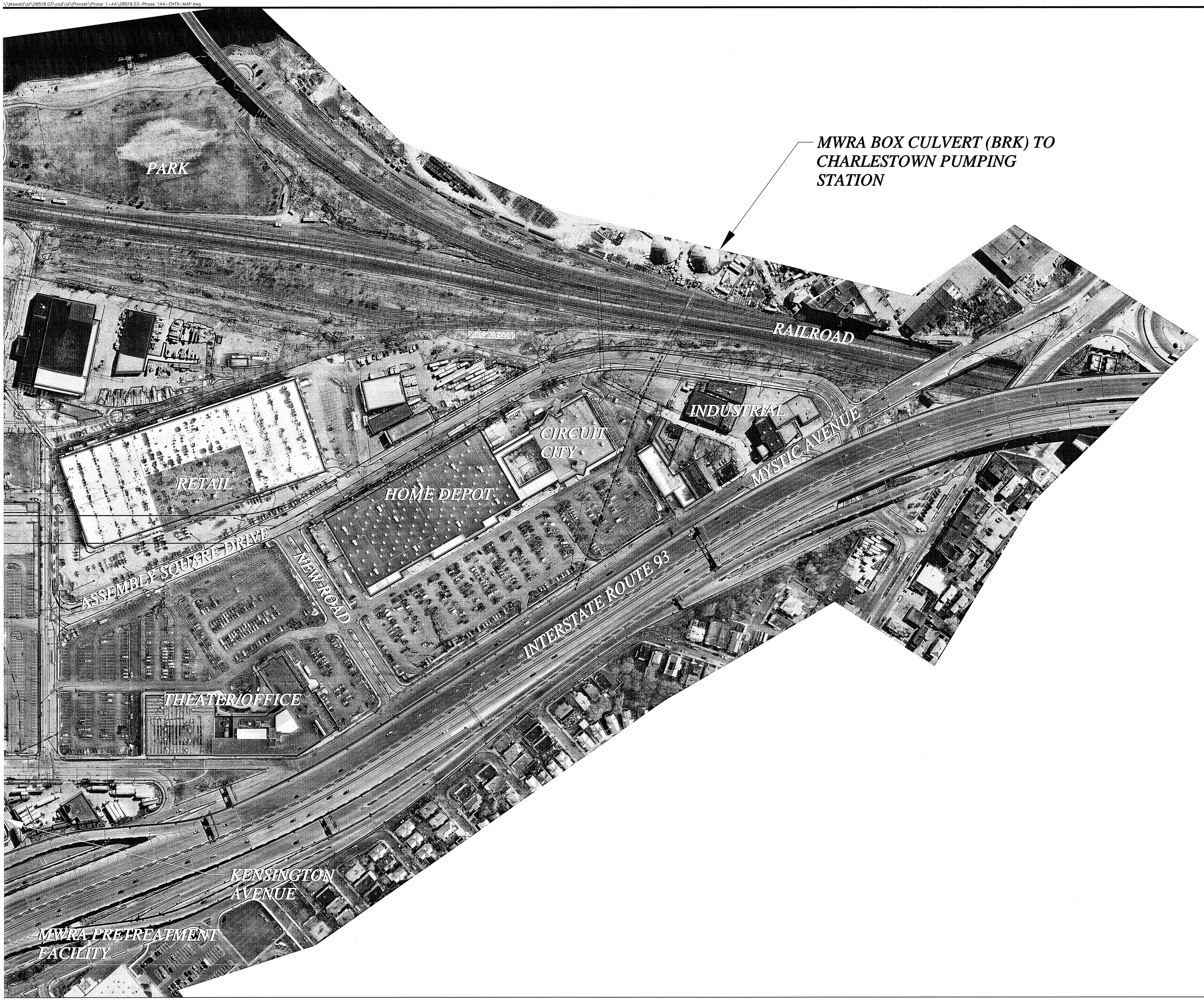

VHB
Vanasse Hangen Brustlin, Inc.

Transportation
Land Development
Environmental Services

101 Walnut Street, P.O. Box 9151
Watertown, Massachusetts 02471
617 924 1770 â FAX 617 924 2286

No.	Revision	Date	Appvd.

Designed by | Drawn by | Checked by
CAD checked by | Approved by
Scale 1"=100' | Date July 20, 2007

Project Title

Phase 1-AA
IKEA

Assembly Square Drive
Somerville, Massachusetts

Issued for

Final Level PUD Approval

Not Approved for Construction

Drawing Title

Neighborhood Context
Map 2

Drawing Number

C-3

Sheet 4 of 13

Project Number
08518.03

7-20-07

08518.03-PHASE 1AA-CNTX-MAP.DWG

\\Mewold\id\08518.03\cad\id\Planset\Phase 1-AA\08518.03-Phase 1AA-OSP.dwg

Parking Summary Chart

Description	Size		Office	Retail	Restaurant	Residential	Hotel	Cinema	IKEA		Mall	
	Required	Provided	Required	Required	Required	Required	Required	Required	Required	Provided	Required	Provided
STANDARD SPACES	9' x 18'	9' x 18'	1,722	391	97	2,069	96	59	302	1,340	1,038	1,082
STANDARD ACCESSIBLE SPACES*	13' x 18'	14' x 18'	23	6	4	25	3	2	6	22	17	18
VAN ACCESSIBLE SPACES*	16' x 18'	17' x 18'	5	2	1	6	1	1	2	5	4	4
TOTAL SPACES			1,750	399	102	2,100	100	62	310	1,367	1,059	1,104
LOADING BAYS**	12'x30'x 14'	12'x30'x 14'	12	10	4	–	1	1	9	9	9	15

* ADA/STATE/LOCAL REQUIREMENTS

Mixed Use Area Loading Requirements: **

OFFICE:	0 – 10,000 SF	(0)	= 12
	10,001 – 100,000 SF	(1)	
	EACH ADDL. 150,000 SF	(1)	
RETAIL:	0 – 5,000 SF	(0)	= 10
	5,001 – 20,000 SF	(1)	
	20,001 – 35,000 SF	(2)	
	35,001 – 50,000 SF	(3)	
	EACH ADDL. 50,000 SF	(1)	
RESTAURANT:	0 – 4,000 SF	(0)	= 4
	4,001 – 6,000 SF	(1)	
	6,001 – 16,000 SF	(2)	
	16,001 – 40,000 SF	(3)	
	EACH ADDL. 40,000 SF	(1)	
HOTEL:	AS NEEDED	–	= 1
CINEMA:	AS NEEDED	–	= 1

TOTAL LOADING REQUIRED = 28
TOTAL LOADING PROVIDED = 33

IKEA Loading Requirements:**

RETAIL:	0 – 5,000 SF	(0)	= 9
	5,001 – 20,000 SF	(1)	
	20,001 – 35,000 SF	(2)	
	35,001 – 50,000 SF	(3)	
	EACH ADDL. 50,000 SF	(1)	

TOTAL LOADING REQUIRED = 9
TOTAL LOADING PROVIDED = 9

Assembly Square Mall Loading Requirements:

RETAIL:	0 – 5,000 SF	(0)	= 9
	5,001 – 20,000 SF	(1)	
	20,001 – 35,000 SF	(2)	
	35,001 – 50,000 SF	(3)	
	EACH ADDL. 50,000 SF	(1)	

TOTAL LOADING REQUIRED = 9
TOTAL LOADING PROVIDED = 15

Mixed Use Area Parking Requirements:*

OFFICE	1,750,000 SF x 1 SPACE / 1,000 SF = 1,750
RETAIL	399,000 SF x 1 SPACE / 1,000 SF = 399
RESTAURANT	51,000 SF x 1 SPACE / 500 SF = 102
CINEMA	62,000 SF x 1 SPACE / 1,000 SF = 62
RESIDENTIAL	1 SPACE / UNIT = 2,100
HOTEL	0.5 SPACES/ GUEST ROOM = 100

TOTAL PARKING REQUIRED = 4,513
TOTAL PARKING PROVIDED = 7,650

IKEA Parking Requirements:*

RETAIL	310,000 SF x 1 SPACE / 1000 SF = 310

TOTAL PARKING REQUIRED = 310
TOTAL PARKING PROVIDED = 1,367

Mall Parking Requirements:*

RETAIL (ZONING)	328,806 SF x 1 SPACE / 1000 SF = 329
RETAIL (LEASE)	328,806 SF x 3.22 SPACE / 1000 SF = 1,059

TOTAL PARKING REQUIRED = 1,059
TOTAL PARKING PROVIDED = 1,104

On Street Parking:

TOTAL PARKING PROVIDED = 132

* Assumptions:

1 PARKING SPACE PER DWELLING UNIT (DU)
1 PARKING SPACE PER 1000 SF OF CINEMA GSF
1 PARKING SPACE PER 1000 SF OF OFFICE GSF
1 PARKING SPACE PER 1000 SF OF RETAIL GSF
1 PARKING SPACE PER 500 SF OF RESTAURANT GSF
1 PARKING SPACE PER .5 HOTEL ROOMS (200 ROOMS)
RESTAURANT SF BASED ON 10% OF TOTAL RETAIL SF
TOTAL PARKING PROVIDED = 7,650 (350 SF PER SPACE)
BY STREET-WORKS

Zoning Summary Chart

Zoning District(s): Assembly Square Mixed-Use District (ASMD)
Overlay District(s): Planned Unit Development Overlay District A (PUD-A), Waterfront Overlay District

Zoning Regulation Requirements	Required	Provided
MIN. LOT AREA	20,000 SF	64.9± AC
FRONT YARD SETBACK	NO MINIMUM	0 FT
SIDE YARD SETBACK	NO MINIMUM	1± FT
REAR YARD SETBACK	NO MINIMUM	11± FT
MAX. FLOOR AREA RATIO	10.0	2.0
MAX. BUILDING HEIGHT < 150' OF MYSTIC RIVER BANK	NONE	NONE
BETWEEN 150' AND 250'	70 FT	70 FT
BETWEEN 250' AND 350'	90 FT	90 FT
WITHIN 1,000' OF MBTA ENTRANCE	250 FT	250 FT
ALL OTHER LOCATIONS	125 FT	100 FT
TOTAL OPEN SPACE	25%	26.5%
USEABLE OPEN SPACE	12.5%	15.0%

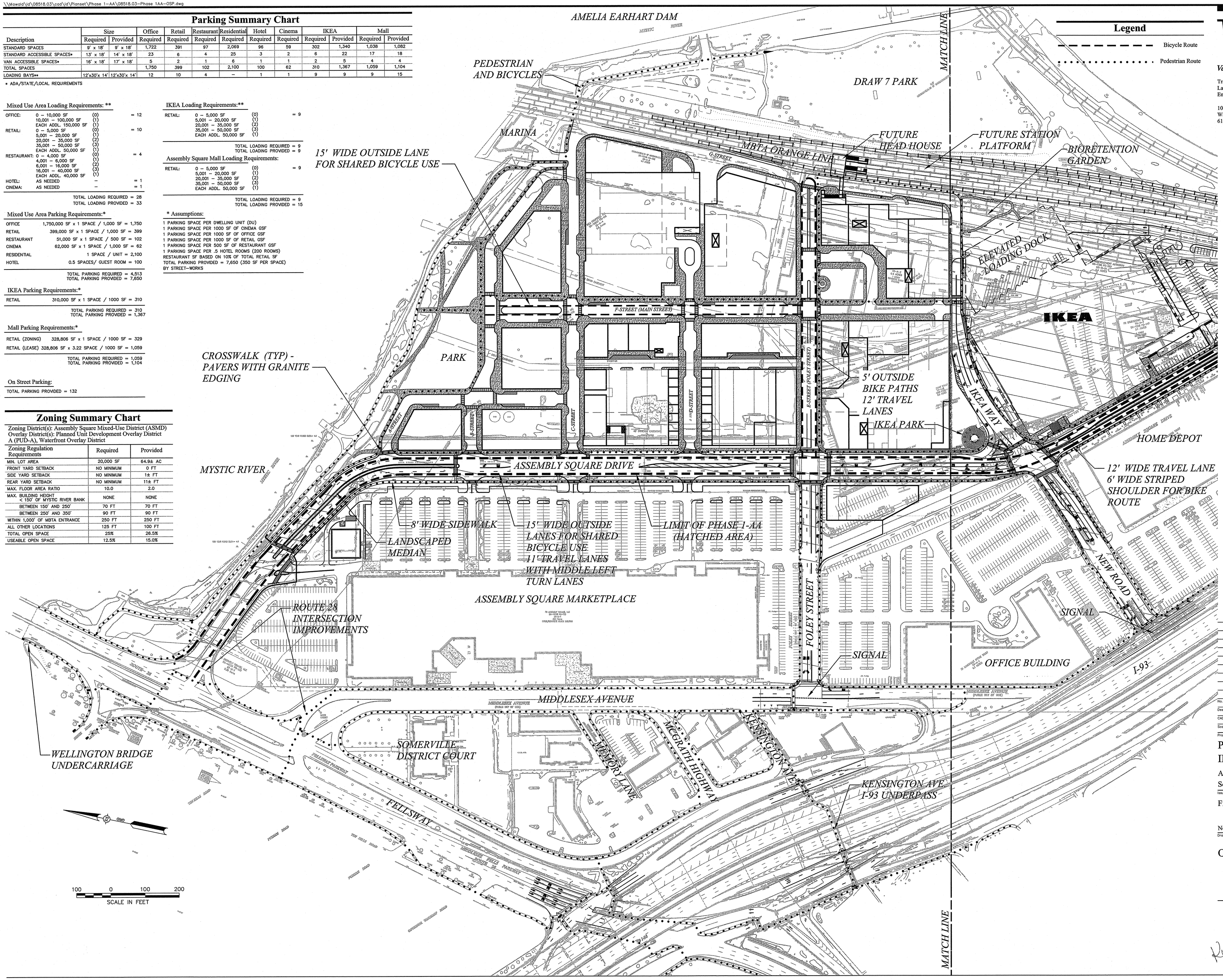

Legend

Bicycle Route
Pedestrian Route

VHB
Vanasse Hangen Brustlin, Inc.

Transportation
Land Development
Environmental Services

101 Walnut Street, P.O. Box 9151
Watertown, Massachusetts 02471
617 924 1770 â FAX 617 924 2286

No.	Revision	Date	Appvd.

Designed by | Drawn by | Checked by
CAD checked by | Approved by
Scale 1"=100' | Date July 20, 2007

Project Title
Phase 1-AA
IKEA
Assembly Square Drive
Somerville, Massachusetts

Issued for
Final Level PUD Approval

Not Approved for Construction

Drawing Title
Overall Site Plan 1

Drawing Number
C-4

Sheet 5 of 13

Project Number
08518.03

COMMONWEALTH OF MASSACHUSETTS
KENDAL L. CHAMBERLAIN
No. 43874
REGISTERED PROFESSIONAL ENGINEER
7-20-07

08518.03-PHASE 1AA-OSP.DWG

\\Mawold\jd\08518.03\cad\jd\Planset\Phase 1-AA\08518.03-Phase 1AA-OSP.dwg

Legend

- Bicycle Route
- Pedestrian Route

Phase 1-AA Pedestrian & Bicycle Route Improvements

1. RECONSTRUCTED FELLSWAY/ASSEMBLY SQUARE DRIVE INTERSECTION WITH BICYCLE AND PEDESTRIAN SIGNAL ACCOMMODATIONS AND CROSSWALKS.
2. WIDE OUTSIDE (COMBINATION) LANES ON ASSEMBLY SQUARE.
3. SIDEWALKS AND CROSSWALKS ON BOTH SIDES OF ASSEMBLY SQUARE DRIVE.
4. RECONSTRUCTED MIDDLESEX AVENUE AND FELLSWAY INTERSECTION.
5. NEW TRAFFIC SIGNAL WITH BICYCLE AND PEDESTRIAN SIGNAL ACCOMMODATIONS AND CROSSWALKS AT FOLEY STREET/MIDDLESEX AVENUE INTERSECTION.
6. NEW TRAFFIC SIGNAL WITH BICYCLE AND PEDESTRIAN SIGNAL ACCOMMODATIONS AND CROSSWALKS AT NEW ROAD/MYSTIC AVENUE INTERSECTION.
7. MBTA AND SHUTTLE BUS STOP AT INTERSECTION OF ASSEMBLY SQUARE DRIVE AND FUTURE IKEA WAY.
8. NEW TRAFFIC SIGNAL WITH BICYCLE AND PEDESTRIAN SIGNAL ACCOMMODATIONS AND CROSSWALKS AT BROADWAY/LOMBARDI INTERSECTION.
9. NEW SIDEWALK ALONG LOMBARDI BETWEEN BROADWAY AND MYSTIC AVENUE.
10. IMPROVED PEDESTRIAN AND BICYCLE SIGNAL ACCOMMODATIONS AND CROSSWALKS AT ASSEMBLY SQUARE DRIVE/MYSTIC AVENUE INTERSECTION.
11. PEDESTRIAN CROSSWALK IMPROVEMENTS AND ACCESSIBLE RAMPS ALONG KENSINGTON AVENUE/I-93 CROSSING ROUTE.

VHB
Vanasse Hangen Brustlin, Inc.
Transportation
Land Development
Environmental Services
101 Walnut Street, P.O. Box 9151
Watertown, Massachusetts 02471
617 924 1770 â FAX 617 924 2286

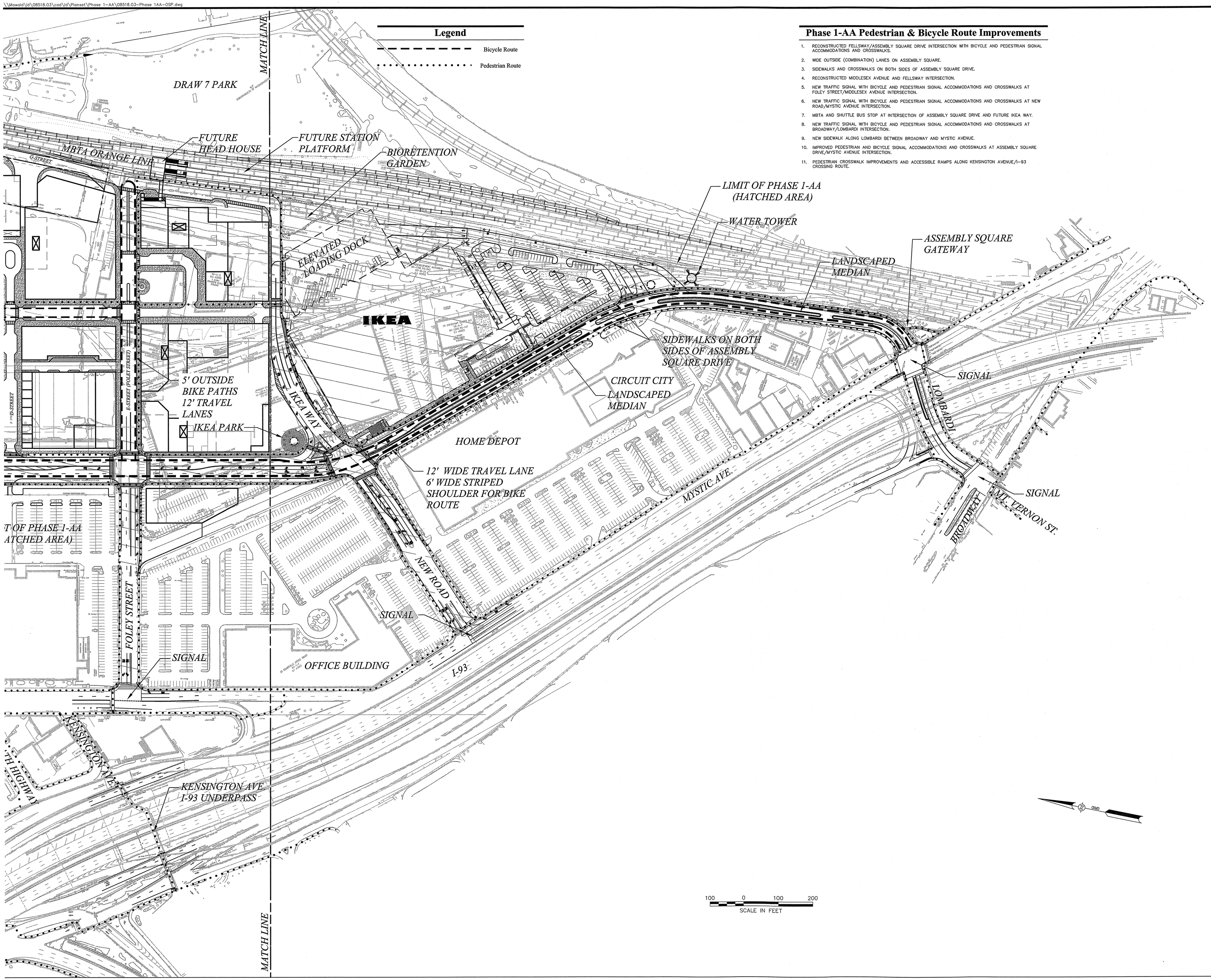

No.	Revision	Date	Appvd.

Designed by	Drawn by	Checked by	
CAD checked by		Approved by	
Scale 1"=100'		Date July 20, 2007	

Project Title

Phase 1-AA
IKEA
Assembly Square Drive
Somerville, Massachusetts

Issued for

Final Level PUD Approval

Not Approved for Construction

Drawing Title

Overall Site Plan 2

Drawing Number

C-5

Sheet 6 of 13

Project Number 08518.03

7-20-07

08518.03-PHASE 1AA-OSP.DWG

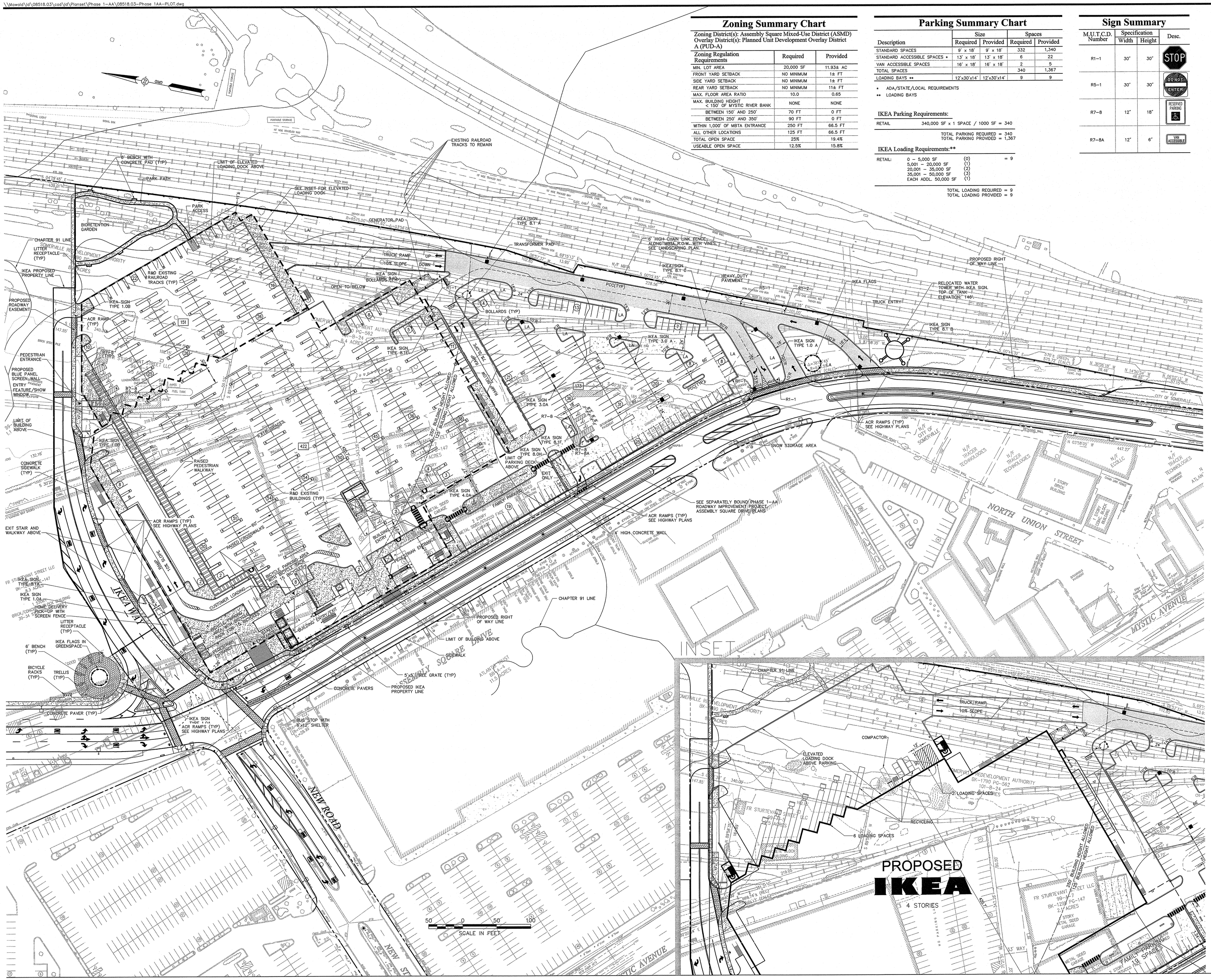

Zoning Summary Chart

Zoning District(s): Assembly Square Mixed-Use District (ASMD) Overlay District(s): Planned Unit Development Overlay District A (PUD-A)

Zoning Regulation Requirements	Required	Provided
MIN. LOT AREA	20,000 SF	11.93± AC
FRONT YARD SETBACK	NO MINIMUM	1± FT
SIDE YARD SETBACK	NO MINIMUM	1± FT
REAR YARD SETBACK	NO MINIMUM	11± FT
MAX. FLOOR AREA RATIO	10.0	0.65
MAX. BUILDING HEIGHT < 150' OF MYSTIC RIVER BANK	NONE	NONE
BETWEEN 150' AND 250'	70 FT	0 FT
BETWEEN 250' AND 350'	90 FT	0 FT
WITHIN 1,000' OF MBTA ENTRANCE	250 FT	66.5 FT
ALL OTHER LOCATIONS	125 FT	66.5 FT
TOTAL OPEN SPACE	25%	19.4%
USEABLE OPEN SPACE	12.5%	15.8%

Parking Summary Chart

Description	Size Required	Size Provided	Spaces Required	Spaces Provided
STANDARD SPACES	9' x 18'	9' x 18'	332	1,340
STANDARD ACCESSIBLE SPACES *	13' x 18'	13' x 18'	6	22
VAN ACCESSIBLE SPACES	16' x 18'	16' x 18'	2	5
TOTAL SPACES			340	1,367
LOADING BAYS **	12'x30'x14'	12'x30'x14'	9	9

* ADA/STATE/LOCAL REQUIREMENTS
** LOADING BAYS

IKEA Parking Requirements:

RETAIL 340,000 SF x 1 SPACE / 1000 SF = 340

TOTAL PARKING REQUIRED = 340
TOTAL PARKING PROVIDED = 1,367

IKEA Loading Requirements:**

RETAIL:	0 – 5,000 SF	(0)	= 9
	5,001 – 20,000 SF	(1)	
	20,001 – 35,000 SF	(2)	
	35,001 – 50,000 SF	(3)	
	EACH ADDL. 50,000 SF	(1)	

TOTAL LOADING REQUIRED = 9
TOTAL LOADING PROVIDED = 9

Sign Summary

M.U.T.C.D. Number	Specification Width	Specification Height	Desc.
R1-1	30"	30"	STOP
R5-1	30"	30"	DO NOT ENTER
R7-8	12"	18"	RESERVED PARKING
R7-8A	12"	6"	VAN ACCESSIBLE

VHB
Vanasse Hangen Brustlin, Inc.
Transportation
Land Development
Environmental Services
101 Walnut Street, P.O. Box 9151
Watertown, Massachusetts 02471
617 924 1770 à FAX 617 924 2286

No.	Revision	Date	Appvd.

Designed by | Drawn by | Checked by
CAD checked by | Approved by
Scale 1"=50' | Date July 20, 2007

Project Title
Phase 1-AA
IKEA
Assembly Square Drive
Somerville, Massachusetts

Issued for
Final Level PUD Approval

Not Approved for Construction

Drawing Title
Layout and Materials Plan

Drawing Number
C-6

Sheet 7 of 13

Project Number
08518.03

7-30-07

\\Mawald\ld\08518.03\cad\ld\Planset\Phase 1-AA\08518.03-Phase 1AA-PLOT.dwg

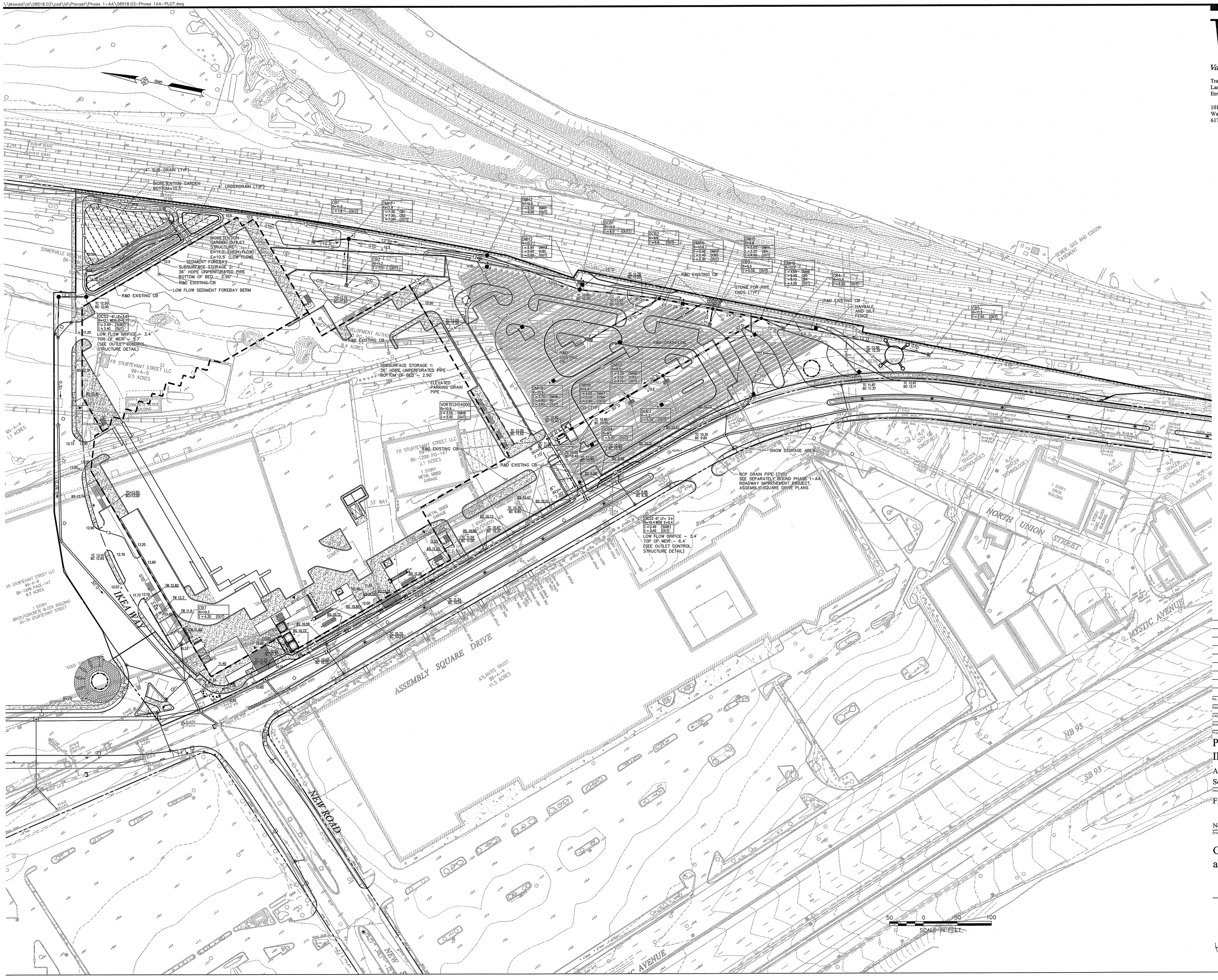

VHB

Vanasse Hangen Brustlin, Inc.

Transportation
Land Development
Environmental Services

101 Walnut Street, P.O. Box 9151
Watertown, Massachusetts 02471
617 924 1770 à FAX 617 924 2286

No.	Revision	Date	Apprvd.

Designed by | Drawn by | Checked by

CAD checked by | Approved by

Scale 1"=50' | Date July 20, 2007

Project Title

Phase 1-AA
IKEA
Assembly Square Drive
Somerville, Massachusetts

Issued for

Final Level PUD Approval

Not Approved for Construction

Drawing Title

Grading, Drainage
and Erosion Control Plan

Drawing Number

C-7

Sheet 8 of 13

Project Number 08518.03

COMMONWEALTH OF MASSACHUSETTS
KENDALL CARDWELL
No. 42674
REGISTERED PROFESSIONAL ENGINEER

7-20-07

08518.03-Phase 1AA-PLOT.dwg

\\Mawald\jd\08518.03\cad\jd\Planset\Phase 1-AA\08518.03-Phase 1AA-PLOT.dwg

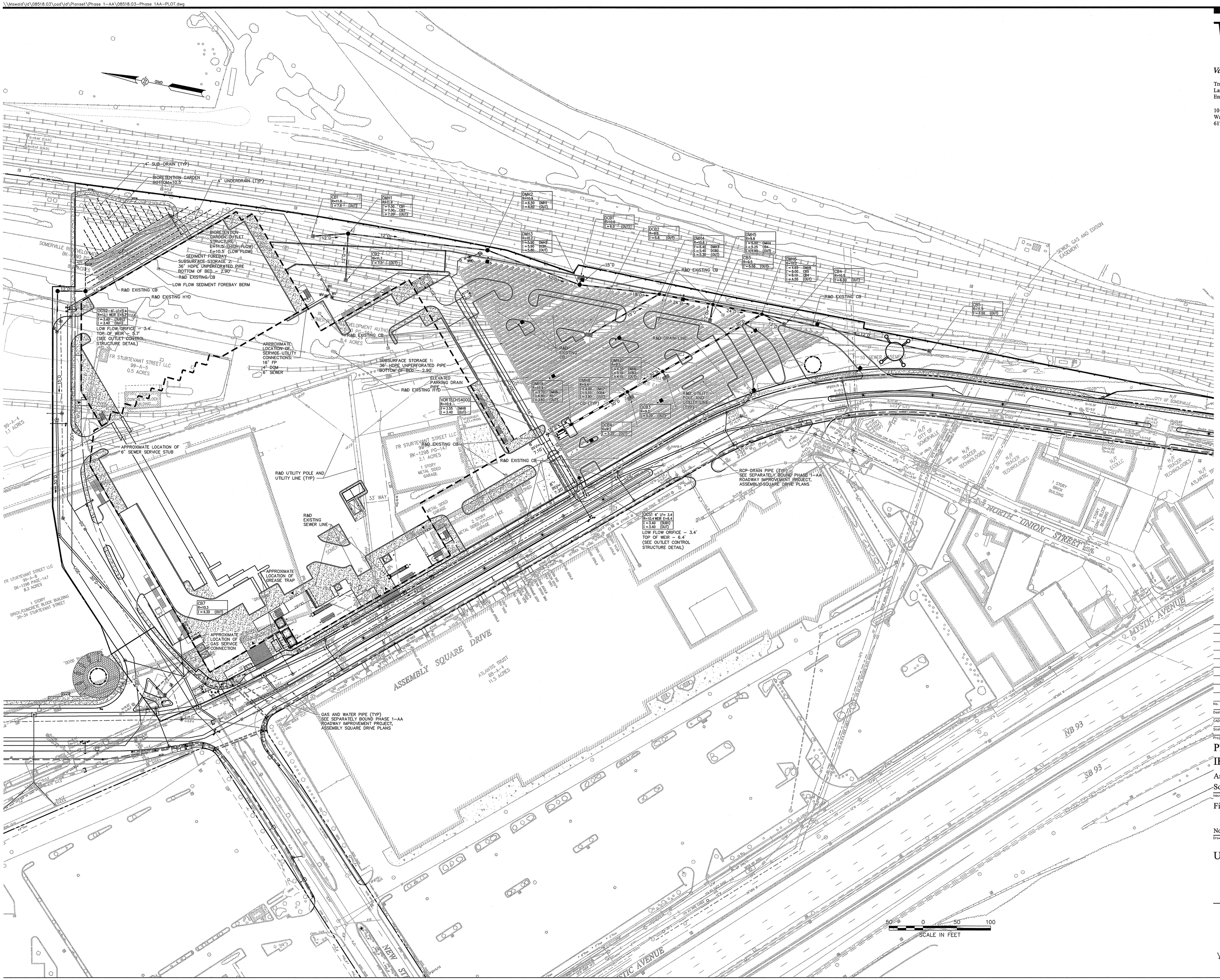

VHB

Vanasse Hangen Brustlin, Inc.

Transportation
Land Development
Environmental Services

101 Walnut Street, P.O. Box 9151
Watertown, Massachusetts 02471
617 924 1770 ♂ FAX 617 924 2286

No.	Revision	Date	Appvd.

Designed by | Drawn by | Checked by

CAD checked by | Approved by

Scale 1"=50' | Date July 20, 2007

Project Title

Phase 1-AA
IKEA
Assembly Square Drive
Somerville, Massachusetts

Issued for

Final Level PUD Approval

Not Approved for Construction

Drawing Title

Utility Plan

Drawing Number

C-8

Sheet 9 of 13

Project Number 08518.03

COMMONWEALTH OF MASSACHUSETTS KENDALL CARPENTER BLAZEN No. 32172 REGISTERED PROFESSIONAL ENGINEER

7-20-07

08518.03-Phase 1AA-PLOT.dwg

Vegetated Stormwater Basin Seeding Schedule

Seeding Schedule

Location	Seed Mix	Seeding Rate
Bioretention Garden Bottoms	New England Erosion Control/Restoration Mix (Dry Sites)	35 lbs/ acre

Note: Seed Mixes are as specified in the catalog of New England Wetlands Plants, Inc. Amherst, MA (413) 256-1152, or approved equivent.
Note: See specifications for seed mix for lawn areas.

PLANT LIST

QTY.	KEY	BOTANICAL NAME	COMMON NAME	SIZE
		SHADE TREES		
21	AR	ACER RUBRUM	RED MAPLE	3-3½" CAL
10	ARA	ACER FREEMANII	ARMSTRONG RED MAPLE	4-4½" CAL
8	AC	AMELANCHIER CANADENSIS 'CLUMP'	CLUMP SHADBLOW SERVICEBERRY	9-10' HT.
3	AG	ACER GRISEUM	PAPERBARK MAPLE	10'-12'- HT.
7	BN	BETULA NIGRA 'HERITAGE'	HERITAGE RIVER BIRCH	10-12' HT.
14	CV	CRATAEGUS VIRIDIS 'WINTER KING'	WINTER KING HAWTORN	9-10' HT.
3	FP	FRAXINUS PENNSLYVANICA	GREEN ASH	3-3½" CAL
3	GB	GINKGO BILOBA 'PRINCETON SENTRY'	PRINCETON SENTRY GINKGO	3-3½" CAL
9	NS	NYSSA SYLVATICA	TUPELO	3-3½" CAL
		EVERGREEN TREES		
13	JV	JUNIPERUS VIRGINIANA	RED CEDAR	6-7' HT
32	PG	PICEA GLAUCA	WHITE SPRUCE	9-10' HT
24	PN	PINUS NIGRA	AUSTRIAN PINE	6-7' HT
47	TMH	TAXUS MEDIA 'HICKSII'	HICK's YEW	5-6' HT
		SHRUBS		
48	AA	ARONIA ARBUTIFOLIA	RED CHOKEBERRY	18-24" HT.
18	CA	CLETHRA ALNIFOLIA 'HUMMINGBIRD'	HUMMINGBIRD SUMMERSWEET CLETHRA	18-24" HT.
108	DG	DEUTZIA GRACILIS 'NIKKO'	NIKKO SLENDER DEUTZIA	18-24" HT
30	IC	ILEX CRENATA 'GREEN LUSTRE'	GREEN LUSTRE JAPANESE HOLLY	18-24" HT.
149	IG	ILEX GLABRA 'SHAMROCK'	SHAMROCK INKBERRY	18-24" HT.
68	IV	ITEA VIRGINICA 'HENRY'S GARNET'	HENRY'S GARNET VIRGINIA SWEETSPIRE	18-24" HT.
72	JB	JUNIPERUS CHINENSIS 'SARGENTII '	SARGENT JUNIPER	18-24" SPD.
42	MP	MYRICA PENNSYLVANICA	NORTHERN BAYBERRY	2-2½' HT.
7	PM	PRUNUS MARITIMA	BEACH PLUM	2-2½' HT.
203	RMF	ROSA 'MEIPELTA'	FUCHSIA MEIDILAND ROSE	18-24" SPD.
86	RMW	ROSA 'MEICGUELAN'	WHITE MEIDILAND ROSE	18-24" SPD.
192	TC	TAXUS CUSPIDATA 'GREENWAVE'	GREENWAVE YEW	18"-24" SPD.
59	VC	VACCINIUM CORYMBOSUM	HIGHBUSH BLUEBERRY	2'-2½' HT.
95	VD	VIBURNUM DENTATUM 'BLUE MUFFIN'	BLUE MUFFIN ARROWWOOD VIBURNUM	2'-2½' HT.
39	VR	VIBURNUM CASSINOIDES	WILD RAISIN VIBURNUM	2-2½' HT.
		PERENNIALS / GROUNDCOVERS		
27	CID	CAREX 'MORROWII 'ICE DANCE'	ICE DANCE SEDGE	#2 POT
36	CKF	CALAMAGROSTIS AGUTIFOLIA 'KARL FOERSTER'	KARL FOERSTER FEATHER REED GRASS	#2 POT
482	HHR	HEMEROCALLIS 'HAPPY RETURNS'	HAPPY RETURNS DAYLILY	#1 POT
182	OS	ONOCLEA SENSIBILIS	SENSITIVE FERN	#1 POT
146	PV	PANICUM VIRGATUM 'HEAVY METAL'	HEAVY METAL SWITCH GRASS	#2 POT
249	PPG	PAXISTIMA CANBYI	BLUE HILL SAGE	#1 POT
184	SSB	SALVIA SUPERBA 'BLUE HILL'	CANBY PAXISTIMA	#2 POT
		VINES		
XX	HH	HEDERA HELIX 'THORNDALE'	THORNDALE ENGLISH IVY	#2 POT
XX	PQ	PARTHANOCISSUS QUINQUEFOLIA	VIRGINIA CREEPER	#2 POT

NOTE: 100 TREES REQUIRED; 125 TREES PROVIDED.

NOTES: SEE ASSEMBLY SQUARE DIVE PLANS FOR ROADWAY PLANT LIST.

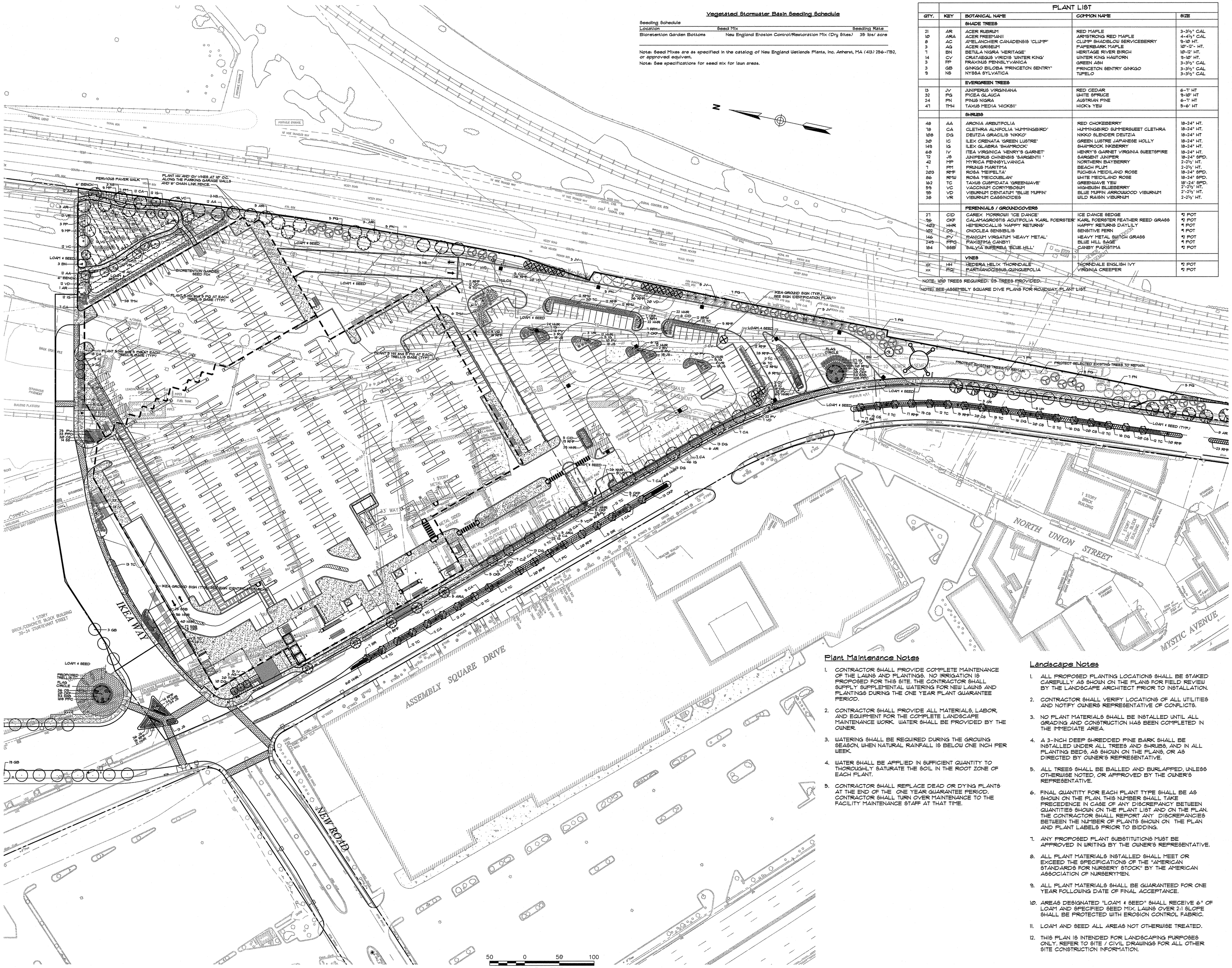

Plant Maintenance Notes

1. CONTRACTOR SHALL PROVIDE COMPLETE MAINTENANCE OF THE LAWNS AND PLANTINGS. NO IRRIGATION IS PROPOSED FOR THIS SITE. THE CONTRACTOR SHALL SUPPLY SUPPLEMENTAL WATERING FOR NEW LAWNS AND PLANTINGS DURING THE ONE YEAR PLANT GUARANTEE PERIOD.
2. CONTRACTOR SHALL PROVIDE ALL MATERIALS, LABOR, AND EQUIPMENT FOR THE COMPLETE LANDSCAPE MAINTENANCE WORK. WATER SHALL BE PROVIDED BY THE OWNER.
3. WATERING SHALL BE REQUIRED DURING THE GROWING SEASON, WHEN NATURAL RAINFALL IS BELOW ONE INCH PER WEEK.
4. WATER SHALL BE APPLIED IN SUFFICIENT QUANTITY TO THOROUGHLY SATURATE THE SOIL IN THE ROOT ZONE OF EACH PLANT.
5. CONTRACTOR SHALL REPLACE DEAD OR DYING PLANTS AT THE END OF THE ONE YEAR GUARANTEE PERIOD. CONTRACTOR SHALL TURN OVER MAINTENANCE TO THE FACILITY MAINTENANCE STAFF AT THAT TIME.

Landscape Notes

1. ALL PROPOSED PLANTING LOCATIONS SHALL BE STAKED CAREFULLY AS SHOWN ON THE PLANS FOR FIELD REVIEW BY THE LANDSCAPE ARCHITECT PRIOR TO INSTALLATION.
2. CONTRACTOR SHALL VERIFY LOCATIONS OF ALL UTILITIES AND NOTIFY OWNER'S REPRESENTATIVE OF CONFLICTS.
3. NO PLANT MATERIALS SHALL BE INSTALLED UNTIL ALL GRADING AND CONSTRUCTION HAS BEEN COMPLETED IN THE IMMEDIATE AREA.
4. A 3-INCH DEEP SHREDDED PINE BARK SHALL BE INSTALLED UNDER ALL TREES AND SHRUBS, AND IN ALL PLANTING BEDS, AS SHOWN ON THE PLANS, OR AS DIRECTED BY OWNER'S REPRESENTATIVE.
5. ALL TREES SHALL BE BALLED AND BURLAPPED, UNLESS OTHERWISE NOTED, OR APPROVED BY THE OWNER'S REPRESENTATIVE.
6. FINAL QUANTITY FOR EACH PLANT TYPE SHALL BE AS SHOWN ON THE PLAN. THIS NUMBER SHALL TAKE PRECEDENCE IN CASE OF ANY DISCREPANCY BETWEEN QUANTITIES SHOWN ON THE PLANT LIST AND ON THE PLAN. THE CONTRACTOR SHALL REPORT ANY DISCREPANCIES BETWEEN THE NUMBER OF PLANTS SHOWN ON THE PLAN AND PLANT LABELS PRIOR TO BIDDING.
7. ANY PROPOSED PLANT SUBSTITUTIONS MUST BE APPROVED IN WRITING BY THE OWNER'S REPRESENTATIVE.
8. ALL PLANT MATERIALS INSTALLED SHALL MEET OR EXCEED THE SPECIFICATIONS OF THE "AMERICAN STANDARDS FOR NURSERY STOCK" BY THE AMERICAN ASSOCIATION OF NURSERYMEN.
9. ALL PLANT MATERIALS SHALL BE GUARANTEED FOR ONE YEAR FOLLOWING DATE OF FINAL ACCEPTANCE.
10. AREAS DESIGNATED "LOAM & SEED" SHALL RECEIVE 6" OF LOAM AND SPECIFIED SEED MIX. LAWNS OVER 2:1 SLOPE SHALL BE PROTECTED WITH EROSION CONTROL FABRIC.
11. LOAM AND SEED ALL AREAS NOT OTHERWISE TREATED.
12. THIS PLAN IS INTENDED FOR LANDSCAPING PURPOSES ONLY. REFER TO SITE / CIVIL DRAWINGS FOR ALL OTHER SITE CONSTRUCTION INFORMATION.

VHB
Vanasse Hangen Brustlin, Inc.
Transportation
Land Development
Environmental Services
101 Walnut Street, P.O. Box 9151
Watertown, Massachusetts 02471
617 924 1770 â FAX 617 924 2286

No.	Revision	Date	Apprvd.

Designed by | Drawn by | Checked by
CAD checked by | Approved by
Scale 1"=50' | Date July 20, 2007

Project Title
Phase 1-AA
IKEA
Assembly Square Drive
Somerville, Massachusetts

Issued for
Final Level PUD Approval

Not Approved for Construction

Drawing Title
Landscape Plan

Drawing Number
C-9

Sheet 10 of 13

Project Number
08518.03

\\Mawald\ld\08518.03\cad\ld\Planset\Phase 1-AA\08518.03-Phase 1AA-DT.dwg

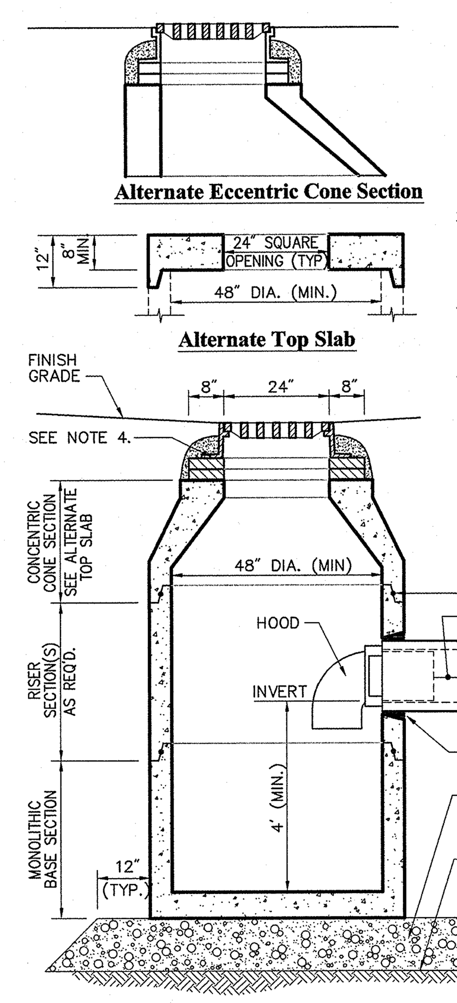

Notes:

1. ALL SECTIONS SHALL BE DESIGNED FOR HS-20 LOADING.
2. PROVIDE "V" KNOCKOUTS FOR PIPES WITH 2" MAX. CLEARANCE TO OUTSIDE OF PIPE. MORTAR ALL PIPE CONNECTIONS.
3. JOINT SEALANT BETWEEN PRECAST SECTIONS SHALL BE PREFORMED BUTYL RUBBER.
4. CATCH BASIN FRAME AND GRATE SHALL BE SET IN FULL MORTAR BED. ADJUST TO GRADE WITH CLAY BRICK AND MORTAR (2 BRICK COURSES TYPICALLY, 5 BRICK COURSES MAXIMUM).

Catch Basin (CB) With Hood

N.T.S. Source: VHB 6/03 LD_101

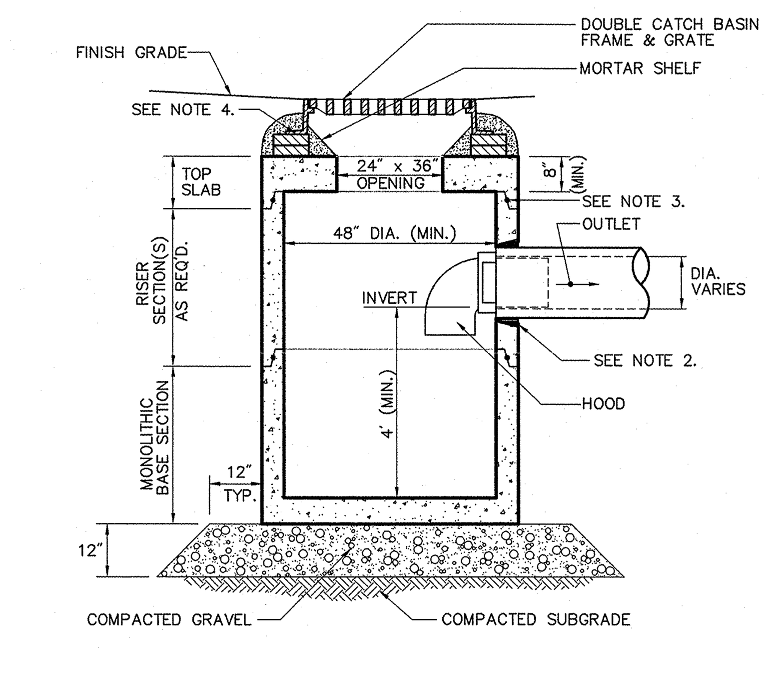

Notes:

1. ALL SECTIONS SHALL BE DESIGNED FOR HS-20 LOADING.
2. PROVIDE "V" KNOCKOUTS FOR PIPES WITH 2" MAX. CLEARANCE TO OUTSIDE OF PIPE. MORTAR ALL PIPE CONNECTIONS.
3. JOINT SEALANT BETWEEN PRECAST SECTIONS SHALL BE BUTYL RUBBER.
4. DOUBLE CATCH BASIN FRAME AND GRATE SHALL BE SET IN FULL MORTAR BED. ADJUST TO GRADE WITH CLAY BRICK AND MORTAR (2 BRICKS TYPICALLY, 5 BRICK COURSES MAXIMUM)

Double Grate Catch Basin (DCB) with Hood

N.T.S. Source: VHB 6/03 LD_103

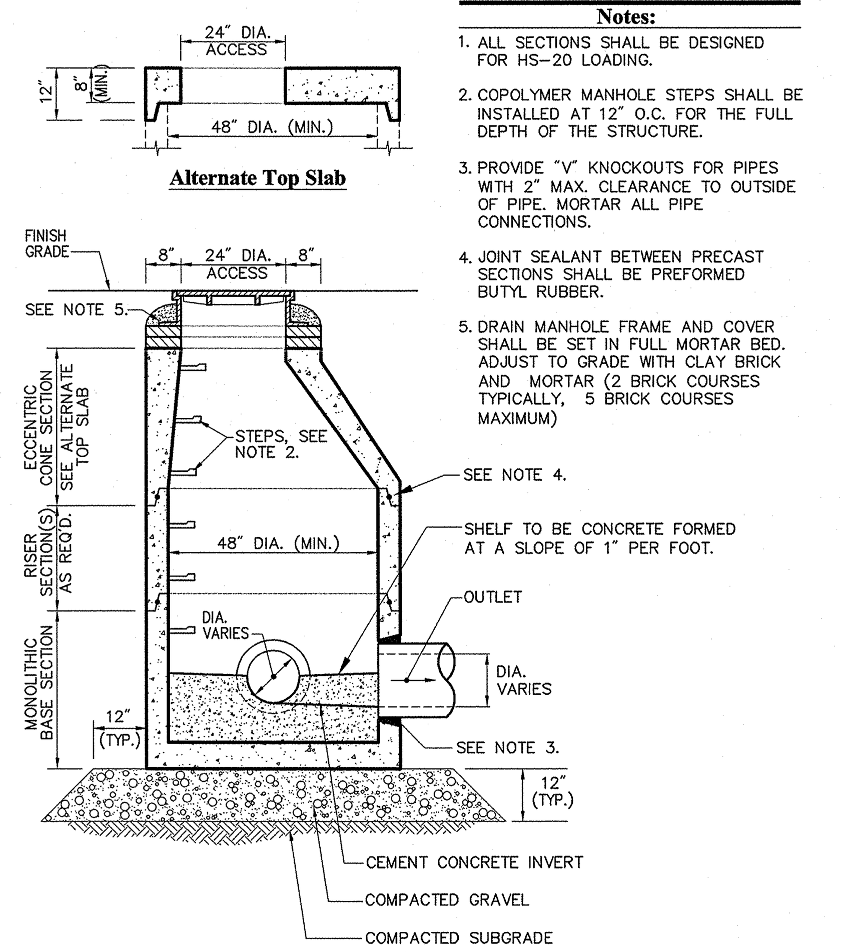

Notes:

1. ALL SECTIONS SHALL BE DESIGNED FOR HS-20 LOADING.
2. COPOLYMER MANHOLE STEPS SHALL BE INSTALLED AT 12" O.C. FOR THE FULL DEPTH OF THE STRUCTURE.
3. PROVIDE "V" KNOCKOUTS FOR PIPES WITH 2" MAX. CLEARANCE TO OUTSIDE OF PIPE. MORTAR ALL PIPE CONNECTIONS.
4. JOINT SEALANT BETWEEN PRECAST SECTIONS SHALL BE PREFORMED BUTYL RUBBER.
5. DRAIN MANHOLE FRAME AND COVER SHALL BE SET IN FULL MORTAR BED. ADJUST TO GRADE WITH CLAY BRICK AND MORTAR (2 BRICK COURSES TYPICALLY, 5 BRICK COURSES MAXIMUM)

Drain Manhole (DMH)

N.T.S. Source: VHB 6/03 LD_115

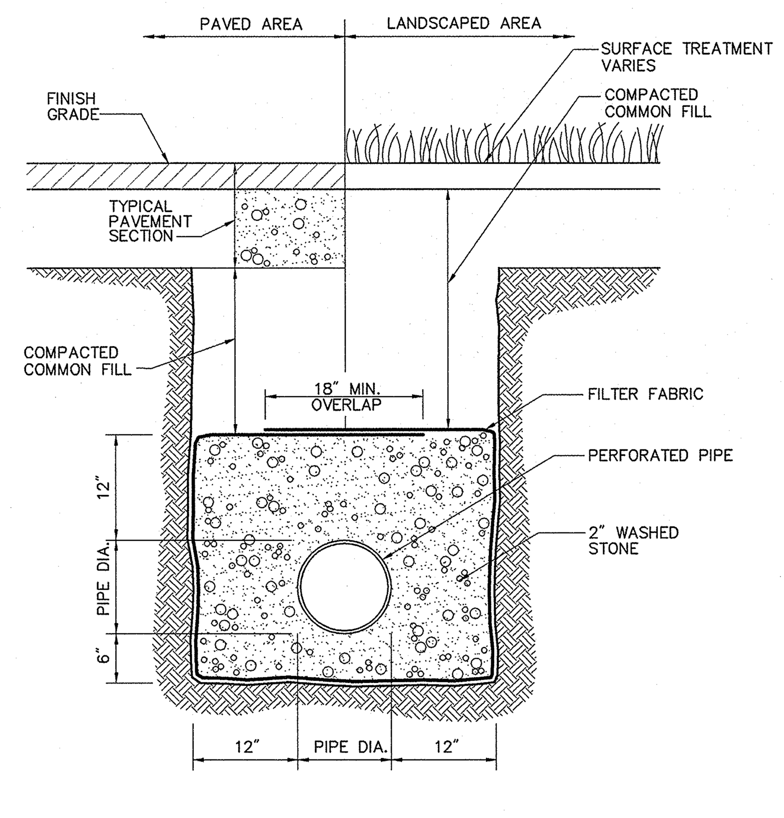

Underdrain (UD)

N.T.S. Source: VHB 6/03 LD_184

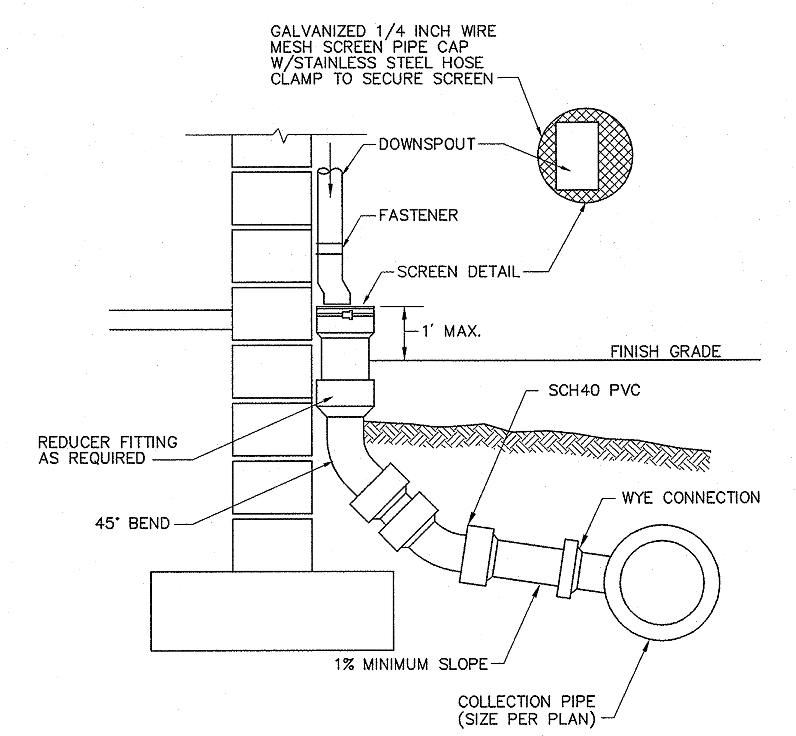

Downspout Rain Leader

N.T.S. Source: VHB REV 6/03 LD_195

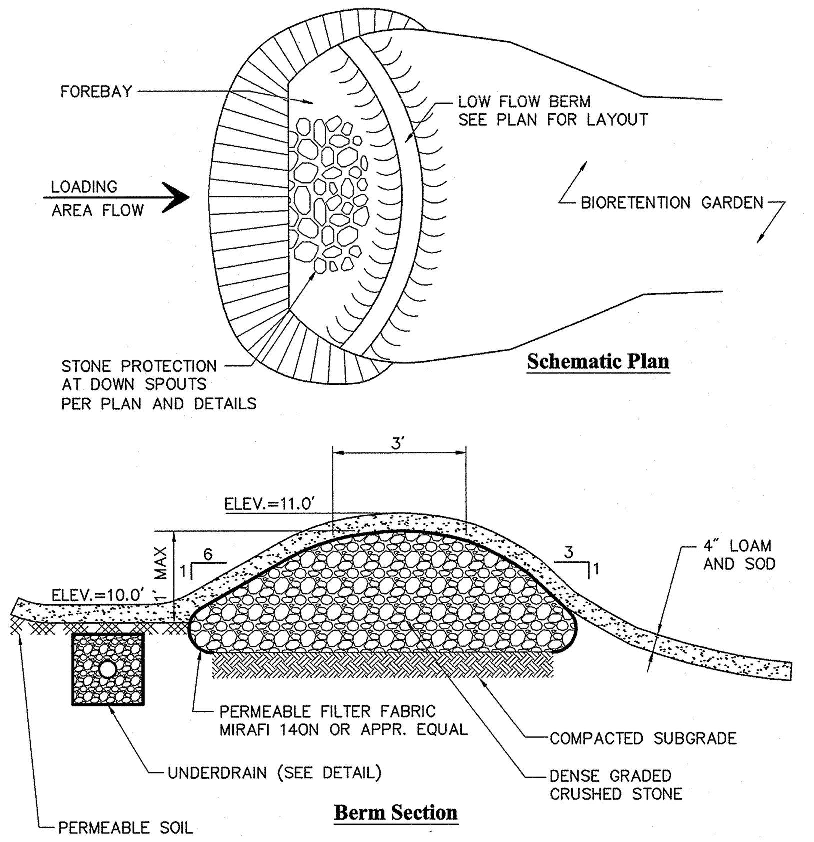

Note

1. FOREBAY DESIGNED TO CAPTURE 0.1 INCHES OF RUNOFF FROM IMPERVIOUS SURFACES

Low Flow Sediment Forebay Berm

N.T.S. Source: VHB REV 6/03 LD_165

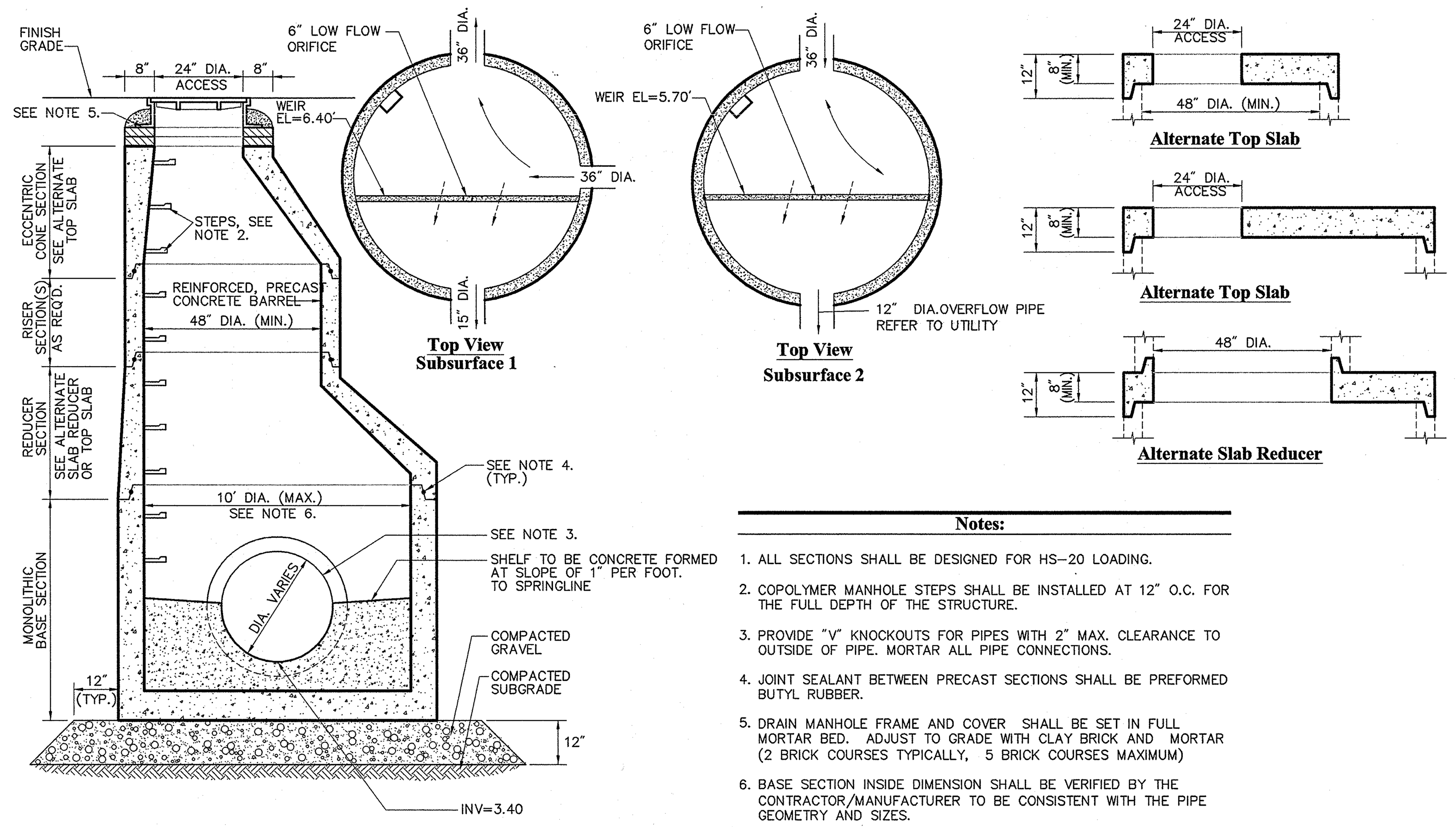

Notes:

1. ALL SECTIONS SHALL BE DESIGNED FOR HS-20 LOADING.
2. COPOLYMER MANHOLE STEPS SHALL BE INSTALLED AT 12" O.C. FOR THE FULL DEPTH OF THE STRUCTURE.
3. PROVIDE "V" KNOCKOUTS FOR PIPES WITH 2" MAX. CLEARANCE TO OUTSIDE OF PIPE. MORTAR ALL PIPE CONNECTIONS.
4. JOINT SEALANT BETWEEN PRECAST SECTIONS SHALL BE PREFORMED BUTYL RUBBER.
5. DRAIN MANHOLE FRAME AND COVER SHALL BE SET IN FULL MORTAR BED. ADJUST TO GRADE WITH CLAY BRICK AND MORTAR (2 BRICK COURSES TYPICALLY, 5 BRICK COURSES MAXIMUM)
6. BASE SECTION INSIDE DIMENSION SHALL BE VERIFIED BY THE CONTRACTOR/MANUFACTURER TO BE CONSISTENT WITH THE PIPE GEOMETRY AND SIZES.

Outlet Control Structure (OCS 1 & 2)

N.T.S. Source: VHB REV 6/03 LD_121

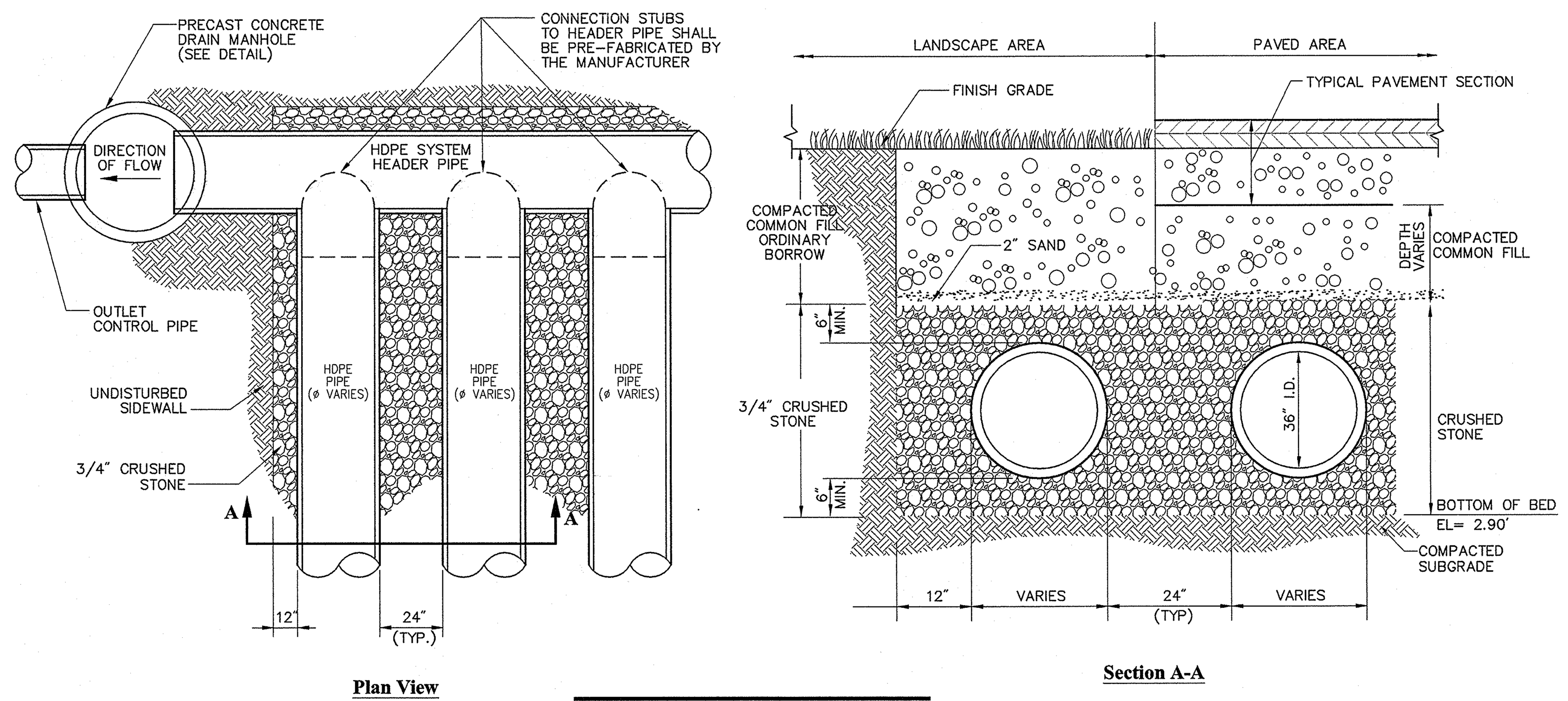

Notes:

PIPE SIZE AND CONFIGURATION TO BE SUPPLIED AS SPECIFIED ON SITE PLANS.

Subsurface Header System

N.T.S. Source: VHB REV 8/05 LD_183

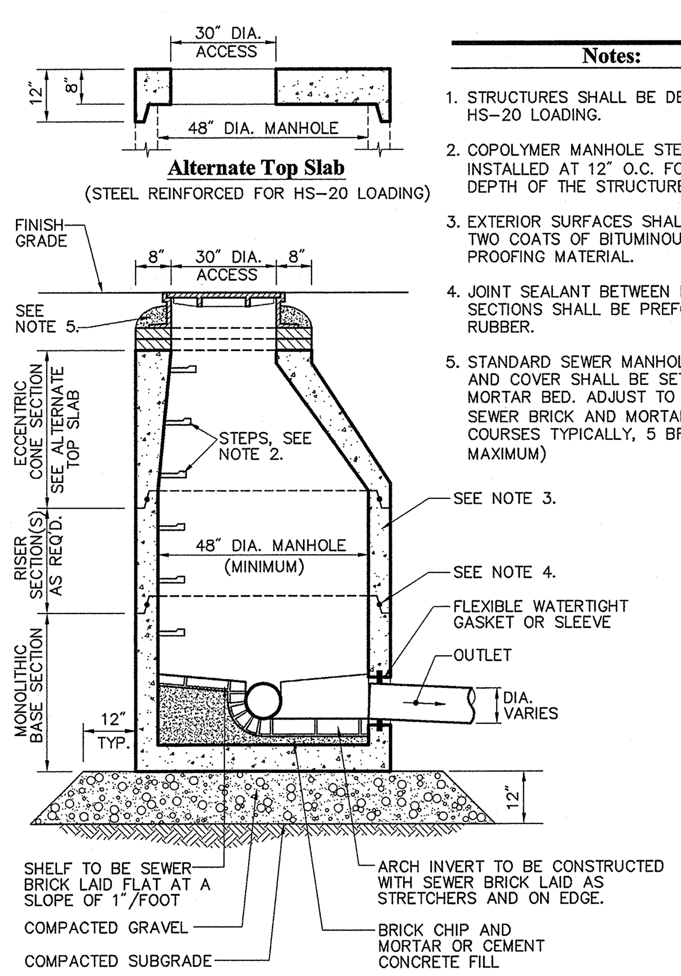

Notes:

1. STRUCTURES SHALL BE DESIGNED FOR HS-20 LOADING.
2. COPOLYMER MANHOLE STEPS SHALL BE INSTALLED AT 12" O.C. FOR THE FULL DEPTH OF THE STRUCTURE.
3. EXTERIOR SURFACES SHALL BE GIVEN TWO COATS OF BITUMINOUS WATER-PROOFING MATERIAL.
4. JOINT SEALANT BETWEEN PRECAST SECTIONS SHALL BE PREFORMED BUTYL RUBBER.
5. STANDARD SEWER MANHOLE FRAME AND COVER SHALL BE SET IN FULL MORTAR BED. ADJUST TO GRADE WITH SEWER BRICK AND MORTAR (2 BRICK COURSES TYPICALLY, 5 BRICK COURSES MAXIMUM)

Sanitary Sewer Manhole (SMH)

N.T.S. Source: VHB 6/03 LD_200

INLET SIZE	D	A	B
4"	3'-6"ø	3'-0"	2'-6"
5"	4'-0"ø	3'-6"	3'-0"
6"	4'-0"ø 5'-0"ø	5'-0" 3'-6"	4'-6" 3'-0"
8"	5'-0"ø 6'-0"ø	6'-0" 4'-0"	5'-0" 3'-6"
10"	6'-0"ø	6'-6"	5'-6"

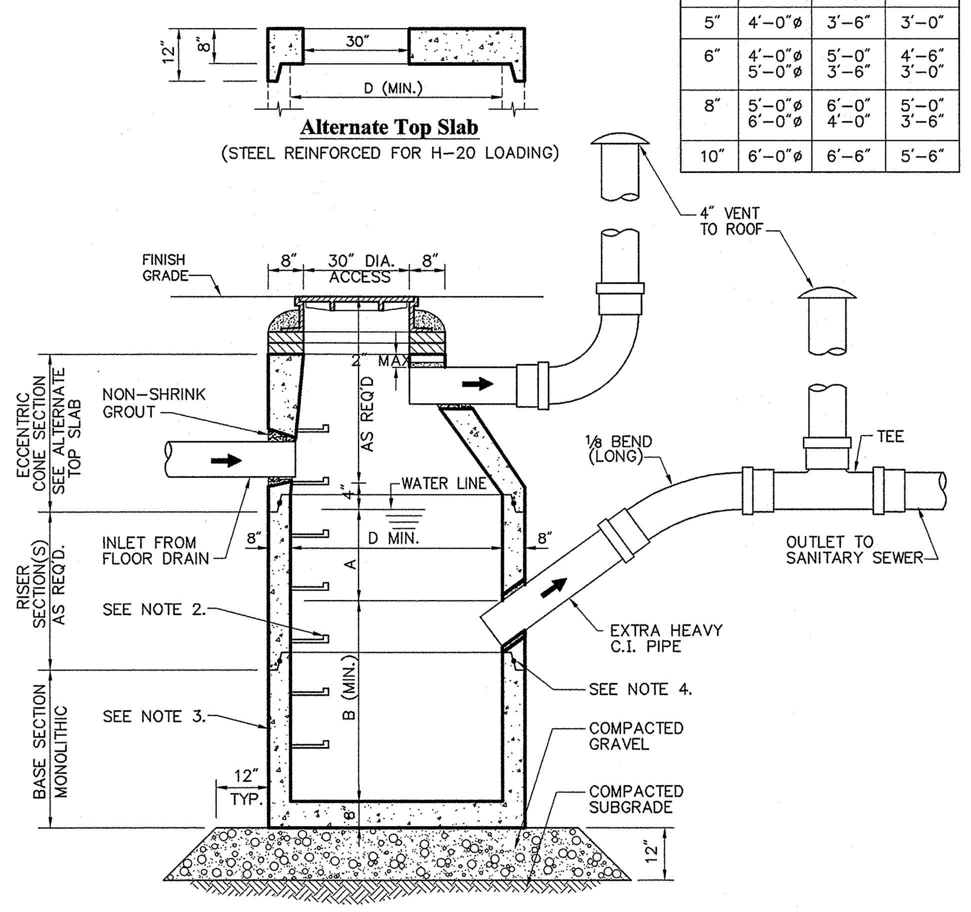

Notes:

1. NUMBER AND SIZING TO BE DESIGNED BY BUILDING MEP.
2. STRUCTURE SHALL BE DESIGNED FOR HS-20 LOADING.
3. COPOLYMER MANHOLE STEPS SHALL BE INSTALLED AT 12" O.C. FOR THE FULL DEPTH OF THE STRUCTURE.
4. EXTERIOR SURFACES SHALL BE GIVEN TWO COATS OF BITUMINOUS WATERPROOFING MATERIAL.
5. JOINT SEALANT BETWEEN PRECAST SECTIONS SHALL BE PREFORMED BUTYL RUBBER.
6. STANDARD SEWER MANHOLE FRAME AND COVER SHALL BE SET IN FULL MORTAR BED. ADJUST TO GRADE WITH CLAY BRICK AND MORTAR (2 BRICK COURSES TYPICALLY, 5 BRICK COURSES MAXIMUM).
7. STRUCTURE TO BE LOCATED OUTSIDE OF BUILDING WHERE POSSIBLE.
8. THE STRUCTURE SHALL BE SO LOCATED AND CONSTRUCTED THAT SURFACE WATER SHALL BE EXCLUDED.
9. INLET PIPE SHALL BE AT LEAST FOUR INCHES ABOVE NORMAL WATER LINE.
10. WHERE SUBJECT TO FROST OR CRUSHING CONDITIONS, OUTLET SHALL BE AT LEAST THREE FEET BELOW THE SURFACE.
11. THE NEW SEPARATOR MUST BE FILLED WITH CLEAN WATER BEFORE USING, AND AFTER BEING EMPTIED FOR PERIODIC CLEANING.
12. OIL AND GASOLINE MUST BE REMOVED BEFORE CLEANING OUT THE BASIN, AND MUST NOT BE DISCHARGED INTO THE SEWER THROUGH OTHER FIXTURES.
13. SPECIFICATIONS FOR COVERING SPECIAL CASES OR CONDITIONS, SHALL BE APPROVED BY THE LOCAL AUTHORITIES, AND THE AUTHORITIES OF THE M.W.R.A.
14. BOTH VENTS SHALL BE EXTENDED INDEPENDENTLY 18" ABOVE THE ROOF, OR AS APPROVED BY THE LOCAL AUTHORITIES, AND THE AUTHORITIES OF THE M.W.R.A.
15. ALL PIPING AND VENT MATERIAL TO BE EXTRA HEAVY CAST IRON OR DUCTILE IRON.

Oil And Gasoline Separator (Garages)

N.T.S. Source: VHB REV 6/03 LD_140

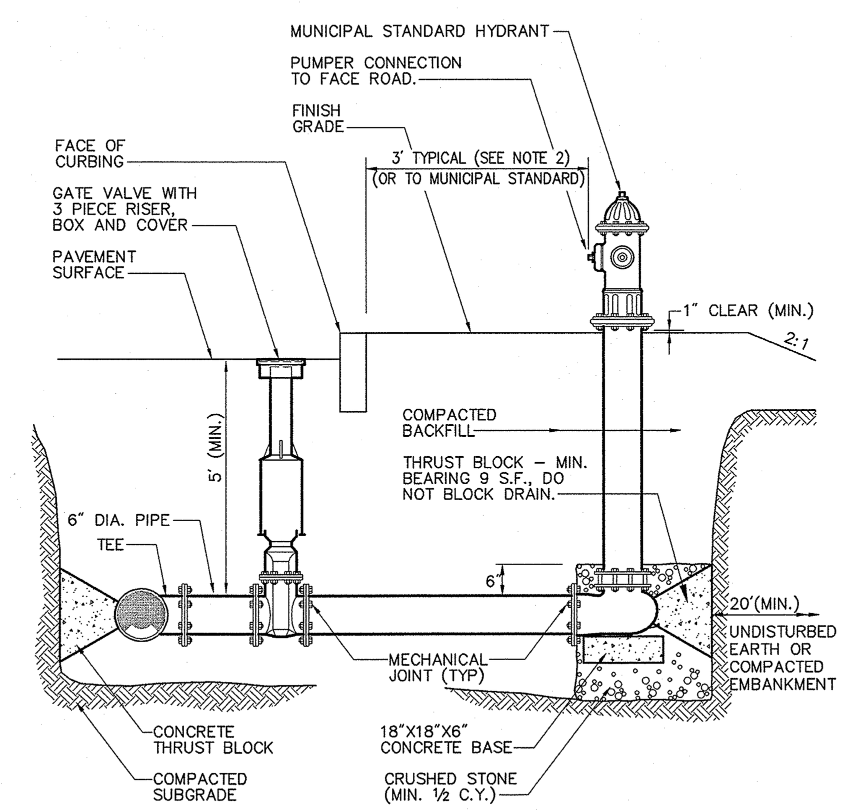

Notes:

1. CONCRETE THRUST BLOCKS TO BE USED ONLY WHERE THEY CAN BEAR ON UNDISTURBED EARTH AS SHOWN. USE CLAMPS AND TIE RODS OR OTHER ACCEPTABLE METHOD OF JOINT RESTRAINT WHERE SOIL CONDITIONS PROHIBIT THE USE OF THRUST BLOCKS.
2. HYDRANT IN SIDEWALK AREAS TO BE LOCATED TO PROVIDE MINIMUM CLEAR SIDEWALK PASSAGE WIDTH OF 3 FEET AT HYDRANT.

Hydrant Construction

N.T.S. Source: VHB 3/06 LD_250

Table Of Dimensions

BENDS	B	C	D	E	F	BENDS	B	C	D	E	F
6" 11 1/4°	8"	15"	12"	24"	12"	6" 45°	8"	30"	12"	24"	14"
6" 22 1/2°	"	19"	"	"	13"	6" 90°	"	30"	"	"	27"
8" 11 1/4°	"	20"	"	"	12"	8" 45°	"	30"	"	"	24"
8" 22 1/2°	"	22"	"	"	17"	8" 90°	"	38"	"	"	36"
12" 11 1/4°	"	30"	"	"	15"	12" 45°	"	40"	"	"	40"
12" 22 1/2°	"	35"	"	"	25"	12" 90°	"	60"	"	"	52"

Bends

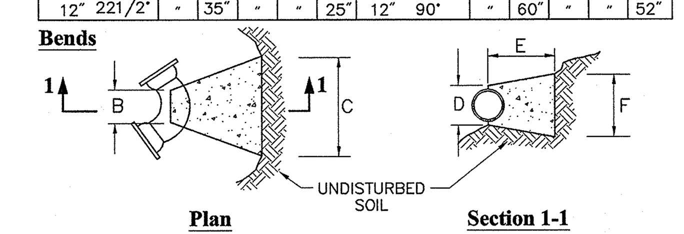

Table Of Dimensions

TEES	G	H	I	J	TEES	G	H	I	J
6"x 6"x 6"	12"	24"	24"	18"	12"x 12"x 6"	12"	24"	24"	18"
8"x 8"x 6"	"	"	"	"	12"x 12"x 8"	"	"	"	24"
8"x 8"x 8"	"	"	"	24"	12"x 12"x 12"	"	36"	"	36"

Tees

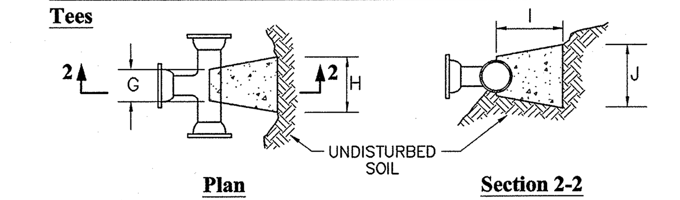

Notes:

1. PROVIDE BLOCKS FOR TAPPING SLEEVES, DEAD ENDS, GATE VALVES, AND VERTICAL BENDS (SAME SIZE AS REQUIRED FOR TEES). PROVIDE ANCHOR RODS AT VERTICAL BENDS AND GATE VALVES.
2. CONCRETE SHALL NOT BE PLACED AGAINST PIPE BEYOND FITTING.
3. CONCRETE SHALL BE 3000 PSI–TYPE I.

Concrete Thrust Block

N.T.S. Source: VHB 6/03 LD_260

VHB
Vanasse Hangen Brustlin, Inc.
Transportation
Land Development
Environmental Services
101 Walnut Street, P.O. Box 9151
Watertown, Massachusetts 02471
617 924 1770 □ FAX 617 924 2286

No.	Revision	Date	Appvd.

Designed by | Drawn by | Checked by
CAD checked by | Approved by
Scale As Noted | Date July 20, 2007

Project Title
Phase 1-AA
IKEA
Assembly Square Drive
Somerville, Massachusetts

Issued for
Final Level PUD Approval

Not Approved for Construction

Drawing Title
Detail Sheet 1

COMMONWEALTH OF MASSACHUSETTS KENDALL CARDWELL CIVIL No. 42674 REGISTERED PROFESSIONAL ENGINEER
7-20-07

Drawing Number
C-10
Sheet 11 of 13
Project Number
08518.03

08518.03–PHASE 1AA–DT.DWG

Precast Concrete Grease Trap (GT)

Notes:

1. STRUCTURE SHALL BE DESIGNED FOR HS-20 LOADING.
2. EXTERIOR SURFACES SHALL BE GIVEN TWO COATS OF BITUMINOUS WATER-PROOFING MATERIAL.
3. JOINT SEALANT BETWEEN PRECAST SECTIONS SHALL BE PREFORMED BUTYL RUBBER.
4. STANDARD 30-INCH SEWER MANHOLE FRAME AND COVER SHALL BE LOCATED OVER CROSSES AND SET IN FULL MORTAR BED. ADJUST TO GRADE WITH SEWER BRICK AND MORTAR (2 BRICK COURSES TYPICALLY, 5 BRICK COURSES MAXIMUM)
5. PIPING SHALL BE SCH 40 PVC WITH SOLVENT WELDED JOINTS. INTERNAL PIPE DIAMETER SHALL BE SAME SIZE AS OUTLET PIPE.

GREASE TRAP	
SIZE(GAL.)	LIQUID DEPTH
4,000	4'-0"
5,000	5'-0"
6,000	6'-0"
7,000	7'-0"
8,000	8'-0"
9,000	9'-0"
10,000	10'-0"

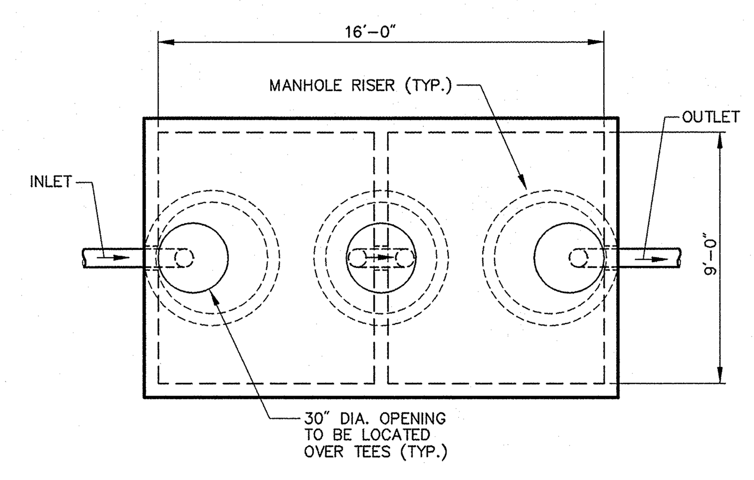

Plan View

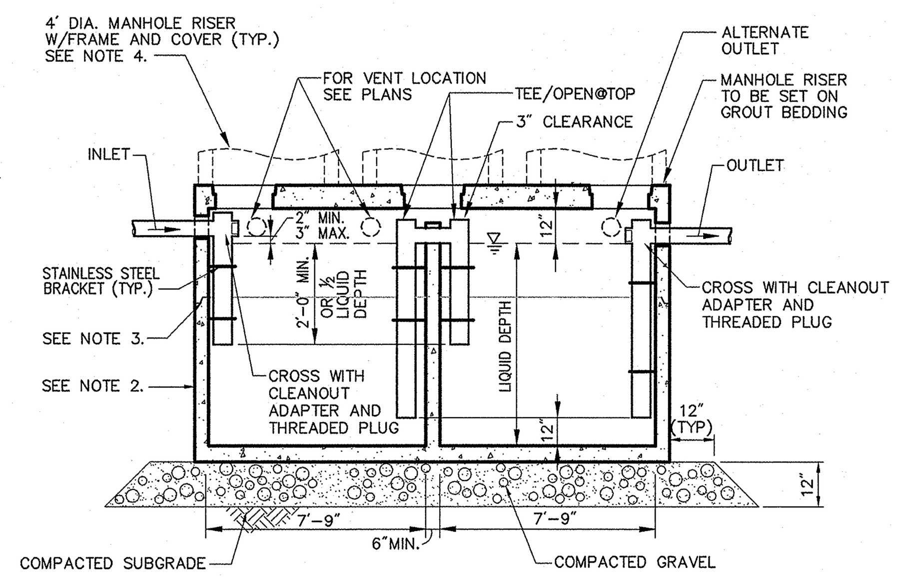

Section

N.T.S. Source: VHB 6/03 LD_211

Bioretention Garden Outlet Control Detail

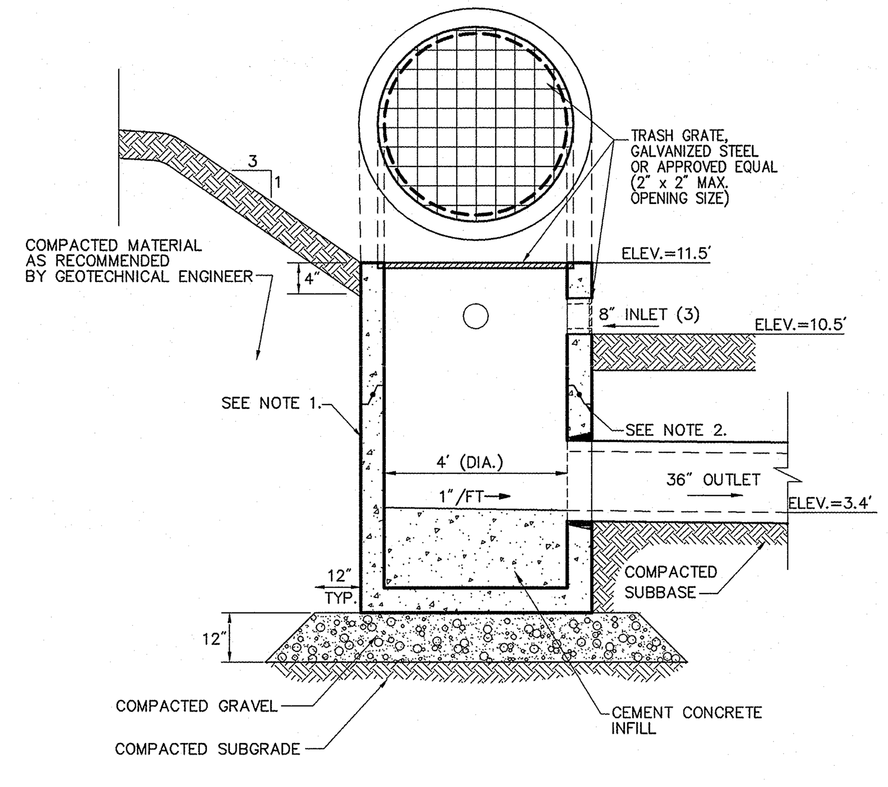

Notes:

1. PROVIDE "V" KNOCKOUTS FOR PIPES WITH 2" MAX. CLEARANCE TO OUTSIDE OF PIPE. MORTAR ALL PIPE CONNECTIONS.
2. JOINT SEALANT BETWEEN PRECAST SECTIONS SHALL BE PREFORMED BUTYL RUBBER.

N.T.S. Source: REV 6/03 LD_163

Utility Trench

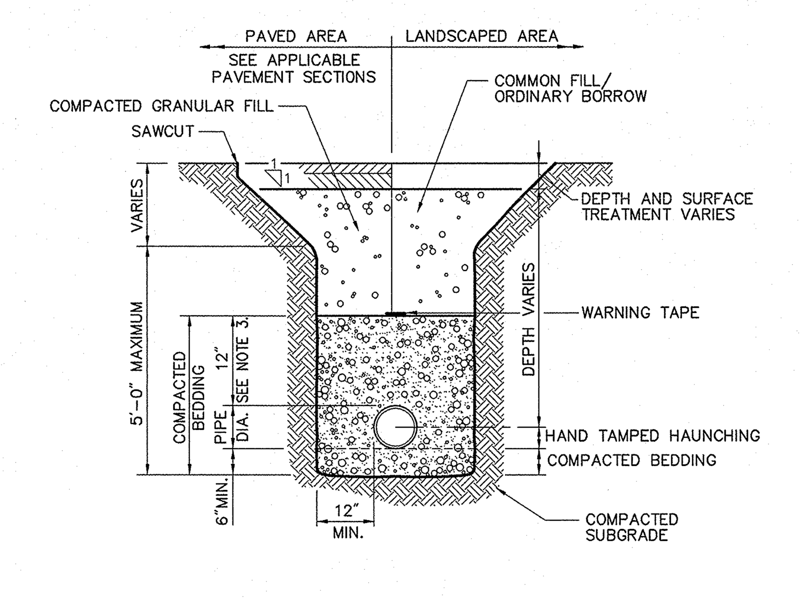

Notes:

1. WHERE UTILITY TRENCHES ARE CONSTRUCTED THROUGH DETENTION BASIN BERMS OR OTHER SUCH SPECIAL SECTIONS, PLACE TRENCH BACKFILL WITH MATERIALS SIMILAR TO THE SPECIAL SECTION REQUIREMENTS.
2. USE METALLIC TRACING/WARNING TAPE OVER ALL PIPES.
3. FOR HDPE PIPE, DIMENSION IS 24 INCHES.

N.T.S. Source: VHB 6/03 LD_300

Light Pole Foundation Detail (Up to 40' Pole)

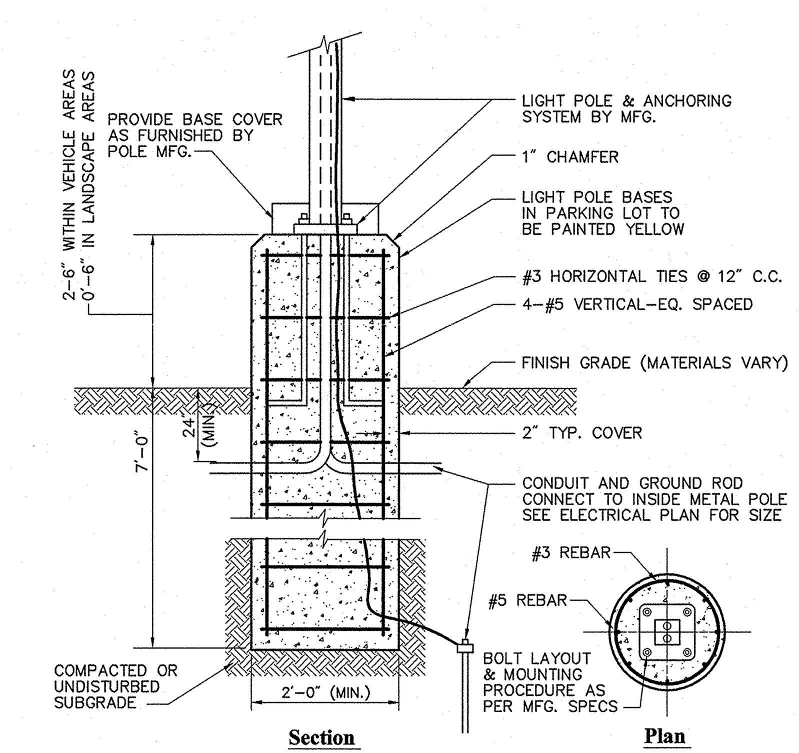

Notes:

LIGHT POLE FOUNDATION DESIGN IS SUBJECT TO CHANGE BASED ON FINAL POLE AND FIXTURE SELECTION AND GEOTECHNICAL SITE INVESTIGATION.

N.T.S. Source: VHB 6/03 LD_310

Cleanout - Landscape Area

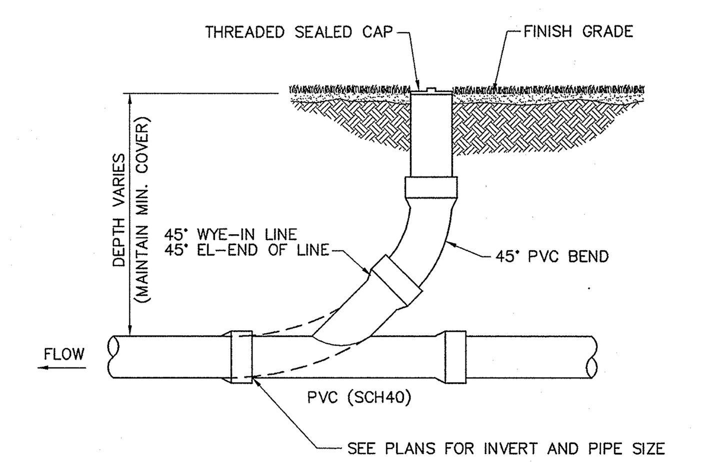

N.T.S. Source: VHB REV 6/03 LD_302

Cleanout - Paved Area

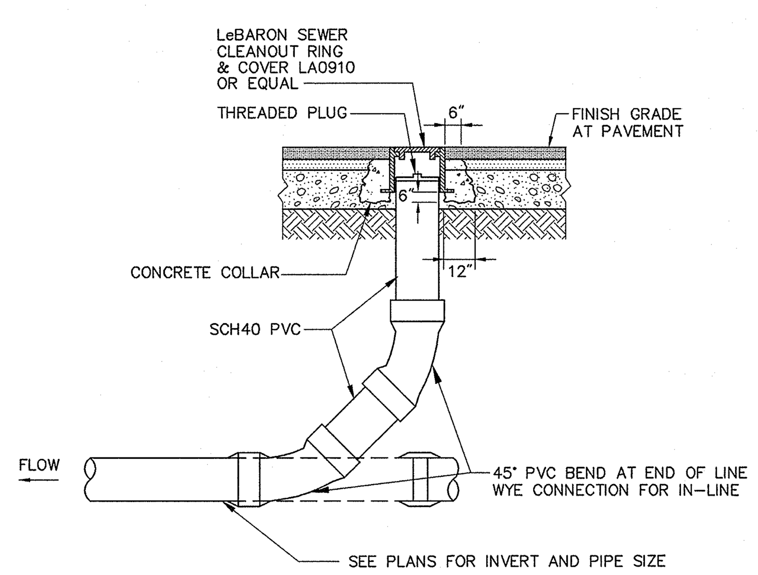

N.T.S. Source: VHB REV 6/03 LD_303

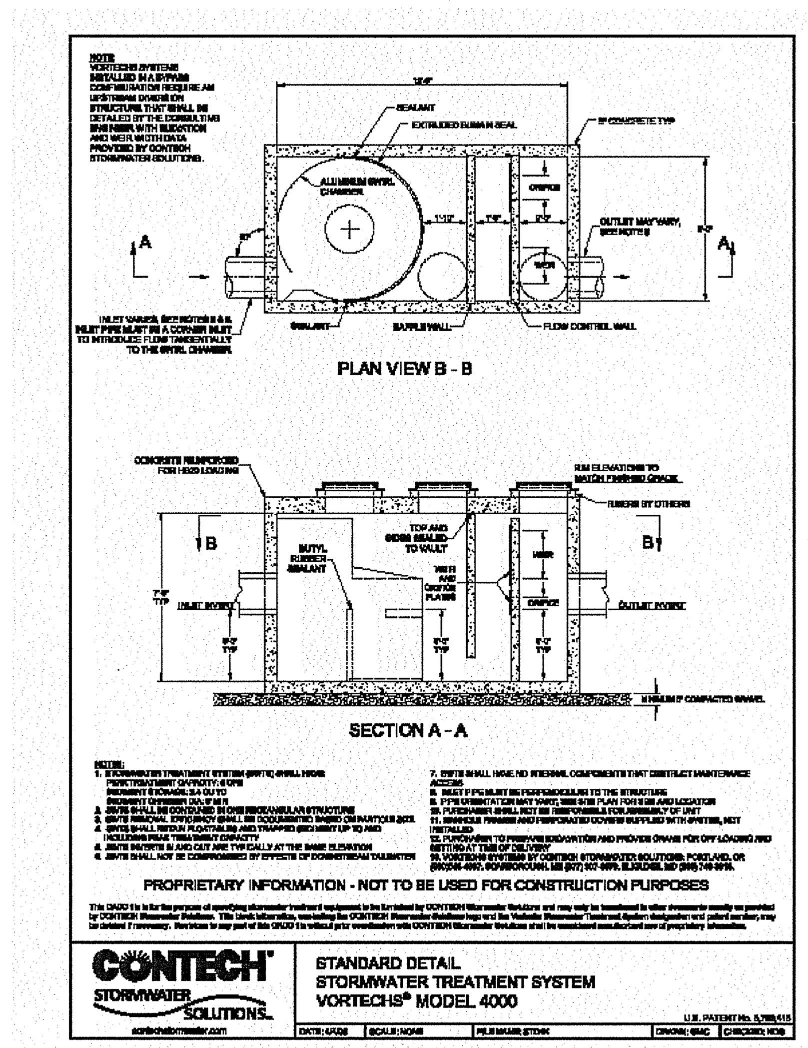

Precast Concrete Curb (PCC)

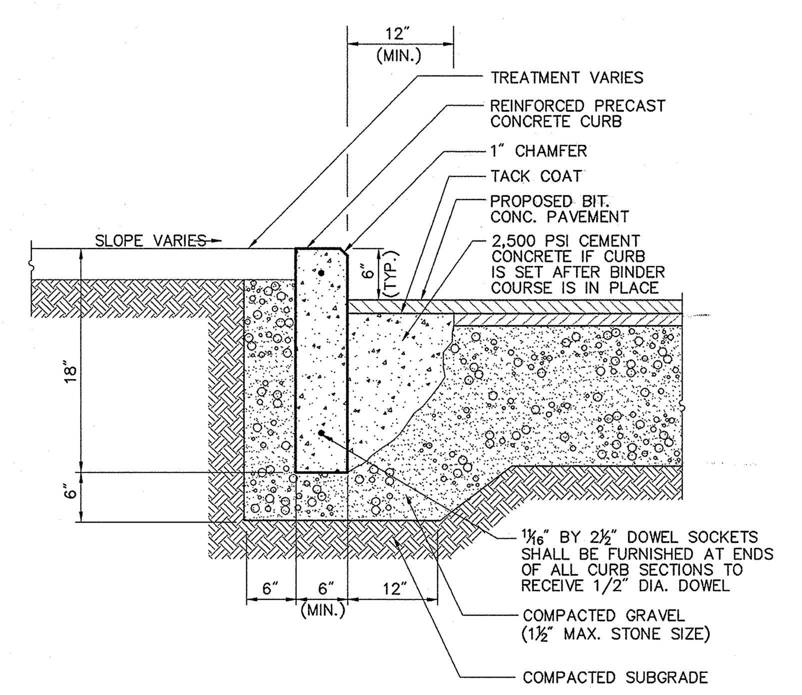

N.T.S. Source: VHB 6/03 LD_404

Vertical Granite Curb (VGC)

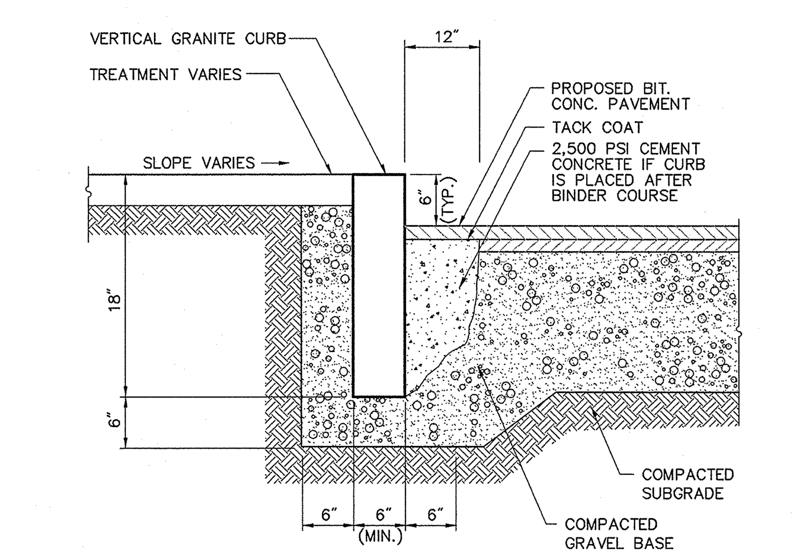

N.T.S. Source: VHB 6/03 LD_402

Concrete Sidewalk

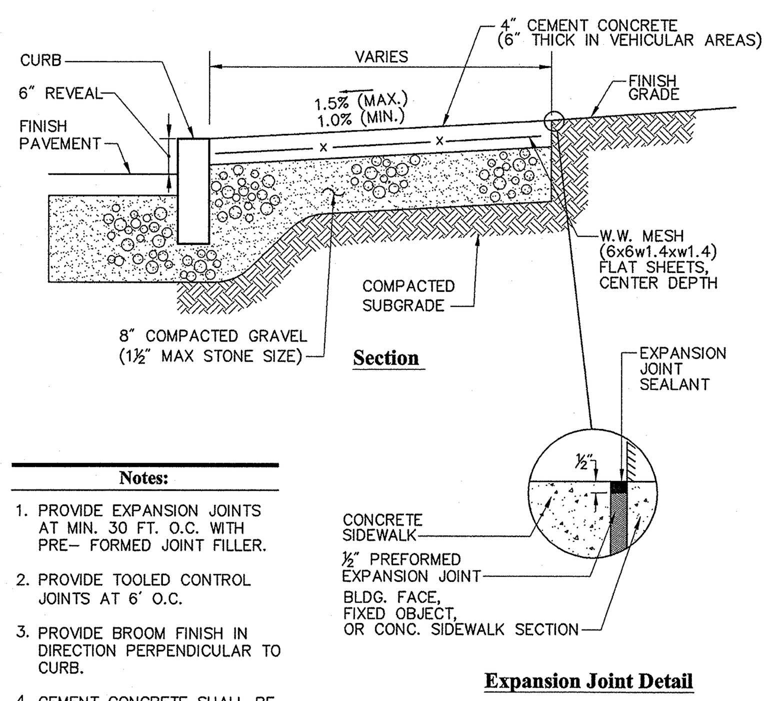

Notes:

1. PROVIDE EXPANSION JOINTS AT MIN. 30 FT. O.C. WITH PRE- FORMED JOINT FILLER.
2. PROVIDE TOOLED CONTROL JOINTS AT 6' O.C.
3. PROVIDE BROOM FINISH IN DIRECTION PERPENDICULAR TO CURB.
4. CEMENT CONCRETE SHALL BE 4000 PSI-TYPE II

N.T.S. Source: VHB 6/03 LD_420

Bituminous Concrete Pavement Sections

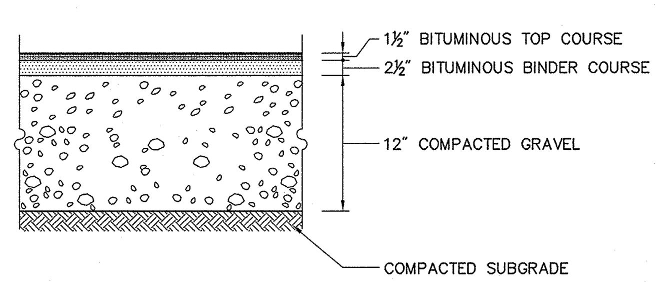

Heavy Duty Flexible Pavement

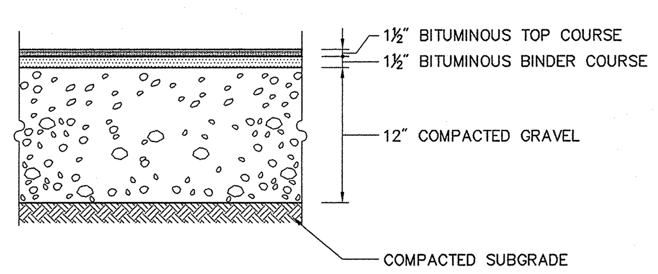

Standard Duty Flexible Pavement

Note:

PAVEMENT SECTIONS ARE SUBJECT TO CHANGE AND WILL BE BASED ON THE RESULTS OF FURTHER GEOTECHNICAL INVESTIGATIONS.

N.T.S. Source: VHB 9/04 LD_430

Accessible Curb Ramp (ACR) Type 'E'

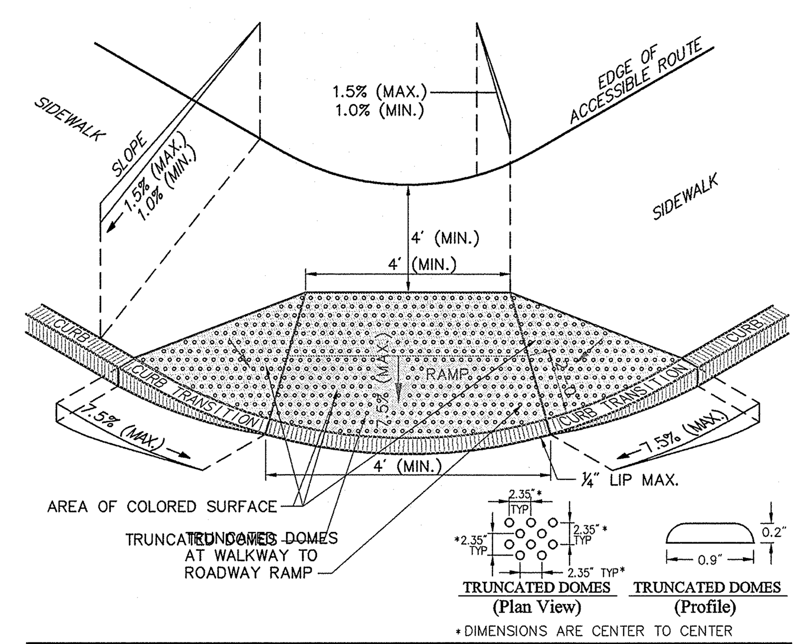

Notes:

1. THE MAXIMUM ALLOWABLE SIDEWALK AND CURB RAMP CROSS SLOPES SHALL BE 1.5 (1% MIN.).
2. THE MAXIMUM ALLOWABLE SLOPE OF ACCESSIBLE ROUTE EXCLUDING CURB RAMPS SHALL BE 5%.
3. THE MAXIMUM ALLOWABLE SLOPE OF ACCESSIBLE ROUTE CURB RAMPS SHALL BE 7.5%.
4. A MINIMUM OF 3 FEET CLEAR SHALL BE MAINTAINED AT ANY PERMANENT OBSTACLE IN ACCESSIBLE ROUTE (I.E., HYDRANTS, UTILITY POLES, TREE WELLS, SIGNS, ETC.).
5. CURB TREATMENT VARIES, SEE PLANS FOR CURB TYPE.
6. RAMP, CURB, AND ADJACENT PAVEMENTS SHALL BE GRADED TO PREVENT PONDING.
7. TYPICAL SIDEWALK SECTION FOR RAMP SECTION CONSTRUCTION.
8. WHERE ACCESSIBLE ROUTES ARE LESS THAN 5' IN WIDTH (EXCLUDING CURBING) A 5' x 5' PASSING AREA SHALL BE PROVIDED AT INTERVALS NOT TO EXCEED 200 FEET.
9. ELIMINATE CURBING AT RAMP (OTHER THAN VERTICAL CURBING, WHICH SHALL BE SET FLUSH) WHERE IT ABUTS ROADWAY.
10. DETECTABLE WARNINGS SHALL CONTRAST VISUALLY WITH ADJOINING SURFACES.

N.T.S. Source: VHB 11/06 LD_504

Accessible Curb Ramp (ACR) Type 'D'

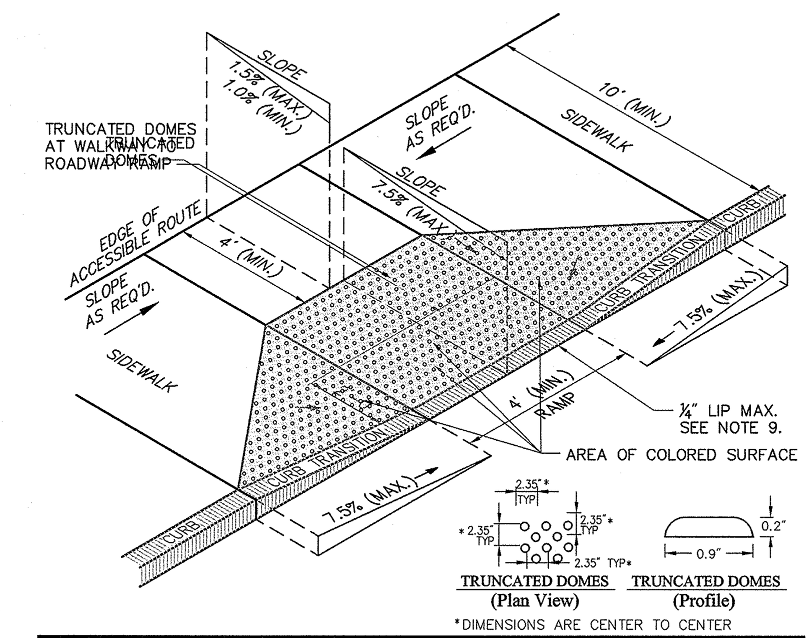

Notes:

1. THE MAXIMUM ALLOWABLE SIDEWALK AND CURB RAMP CROSS SLOPES SHALL BE 1.5 (1% MIN.).
2. THE MAXIMUM ALLOWABLE SLOPE OF ACCESSIBLE ROUTE EXCLUDING CURB RAMPS SHALL BE 5%.
3. THE MAXIMUM ALLOWABLE SLOPE OF ACCESSIBLE ROUTE CURB RAMPS SHALL BE 7.5%.
4. A MINIMUM OF 3 FEET CLEAR SHALL BE MAINTAINED AT ANY PERMANENT OBSTACLE IN ACCESSIBLE ROUTE (I.E., HYDRANTS, UTILITY POLES, TREE WELLS, SIGNS, ETC.).
5. CURB TREATMENT VARIES, SEE PLANS FOR CURB TYPE.
6. RAMP, CURB, AND ADJACENT PAVEMENTS SHALL BE GRADED TO PREVENT PONDING.
7. TYPICAL SIDEWALK SECTION FOR RAMP SECTION CONSTRUCTION.
8. WHERE ACCESSIBLE ROUTES ARE LESS THAN 5' IN WIDTH (EXCLUDING CURBING) A 5' x 5' PASSING AREA SHALL BE PROVIDED AT INTERVALS NOT TO EXCEED 200 FEET.
9. ELIMINATE CURBING AT RAMP WHERE IT ABUTS ROADWAY, EXCEPT WHERE VERTICAL CURBING IS INDICATED ON THE DRAWINGS TO BE SET FLUSH.
10. DETECTABLE WARNINGS SHALL CONTRAST VISUALLY WITH ADJOINING SURFACES.

N.T.S. Source: VHB 11/06 LD_503

Accessible Curb Ramp (ACR) - Type 'B'

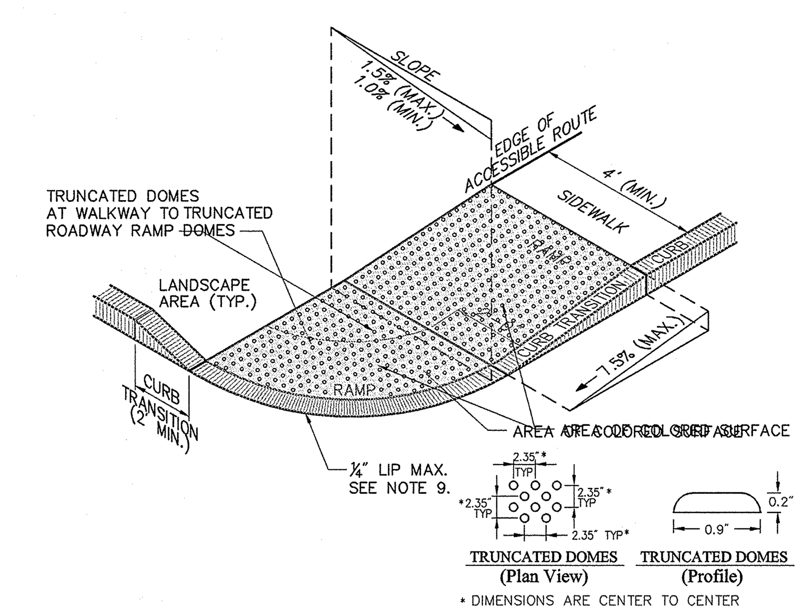

Notes:

1. THE MAXIMUM ALLOWABLE SIDEWALK AND CURB RAMP CROSS SLOPES SHALL BE 1.5 (1% MIN.).
2. THE MAXIMUM ALLOWABLE SLOPE OF ACCESSIBLE ROUTE EXCLUDING CURB RAMPS SHALL BE 5%.
3. THE MAXIMUM ALLOWABLE SLOPE OF ACCESSIBLE ROUTE CURB RAMPS SHALL BE 7.5%.
4. A MINIMUM OF 3 FEET CLEAR SHALL BE MAINTAINED AT ANY PERMANENT OBSTACLE IN ACCESSIBLE ROUTE (I.E., HYDRANTS, UTILITY POLES, TREE WELLS, SIGNS, ETC.).
5. CURB TREATMENT VARIES, SEE PLANS FOR CURB TYPE.
6. RAMP, CURB AND ADJACENT PAVEMENTS SHALL BE GRADED TO PREVENT PONDING.
7. SEE TYPICAL SIDEWALK SECTION FOR RAMP CONSTRUCTION.
8. WHERE ACCESSIBLE ROUTES ARE LESS THAN 5' IN WIDTH (EXCLUDING CURBING) A 5' x 5' PASSING AREA SHALL BE PROVIDED AT INTERVALS NOT TO EXCEED 200 FEET.
9. ELIMINATE CURBING AT RAMP WHERE IT ABUTS ROADWAY, EXCEPT WHERE VERTICAL CURBING IS INDICATED ON THE DRAWINGS TO BE INSTALLED AND SET FLUSH.
10. DETECTABLE WARNINGS SHALL CONTRAST VISUALLY WITH ADJOINING SURFACES.

N.T.S. Source: VHB 11/06 LD_501

VHB
Vanasse Hangen Brustlin, Inc.
Transportation
Land Development
Environmental Services
101 Walnut Street, P.O. Box 9151
Watertown, Massachusetts 02471
617 924 1770 □ FAX 617 924 2286

No.	Revision	Date	Appvd.
Designed by	Drawn by	Checked by	
CAD checked by	Approved by		
Scale As Noted	Date July 20, 2007		

Project Title
Phase 1-AA
IKEA
Assembly Square Drive
Somerville, Massachusetts

Issued for
Final Level PUD Approval

Not Approved for Construction

Drawing Title
Detail Sheet 2

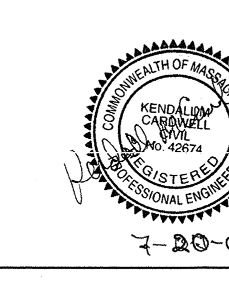

7-20-07

Drawing Number
C-11

Sheet 12 of 13

Project Number
08518.03

VHB
Vanasse Hangen Brustlin, Inc.
Transportation
Land Development
Environmental Services
101 Walnut Street, P.O. Box 9151
Watertown, Massachusetts 02471
617 924 1770 □ FAX 617 924 2286

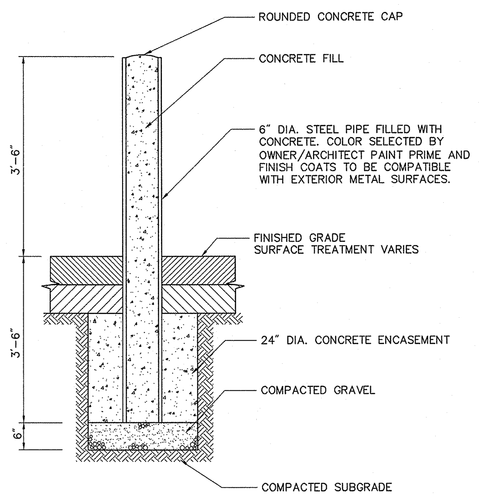

Bollard
N.T.S. Source: VHB 6/03 LD_700

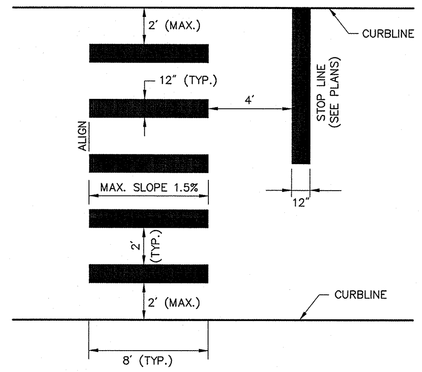

Notes:

1. TWELVE INCH (12") LINES SHALL BE APPLIED IN ONE APPLICATION, NO COMBINATION OF LINES (TWO – 6 INCH LINES) WILL BE ACCEPTED.
2. LONGITUDINAL CROSSWALK LINES TO BE PARALLEL TO CURBLINE.
3. ALL LONGITUDINAL CROSSWALK LINES TO BE THE SAME LENGTH AND PROPERLY ALIGNED.
4. CROSS WALK SIDESLOPE SHALL NOT EXCEED 1.5%.

Crosswalk
N.T.S. Source: VHB 6/03 LD_553

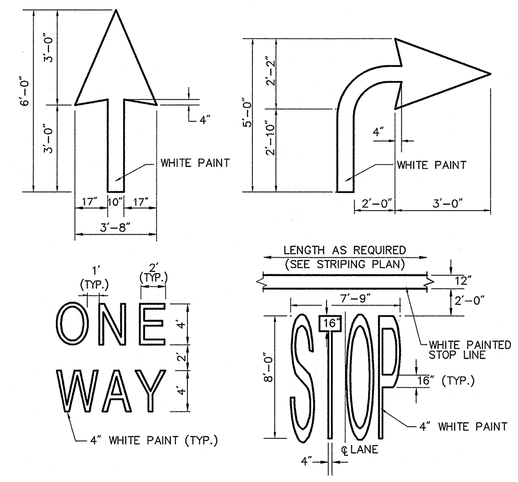

Notes:

1. PAVEMENT MARKINGS TO BE INSTALLED FOR ON SITE WORK IN LOCATIONS SHOWN.

Painted Pavement Markings - On Site
N.T.S. Source: VHB 6/03 LD_554

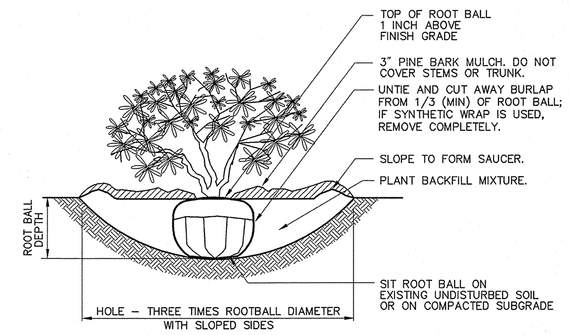

Notes:

1. LOOSEN ROOTS AT THE OUTER EDGE OF ROOTBALL OF CONTAINER GROWN SHRUBS.

Shrub Planting
N.T.S. Source: VHB 6/03 LD_600

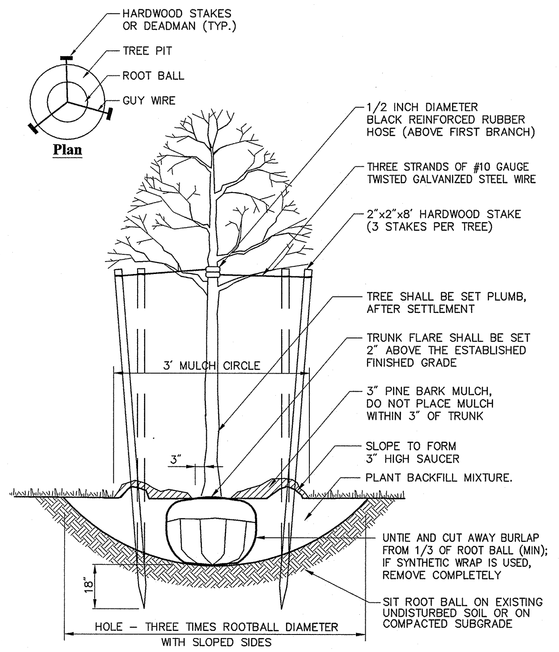

Tree Planting (For Trees Under 4" Caliper)
N.T.S. Source: VHB 6/03 LD_602

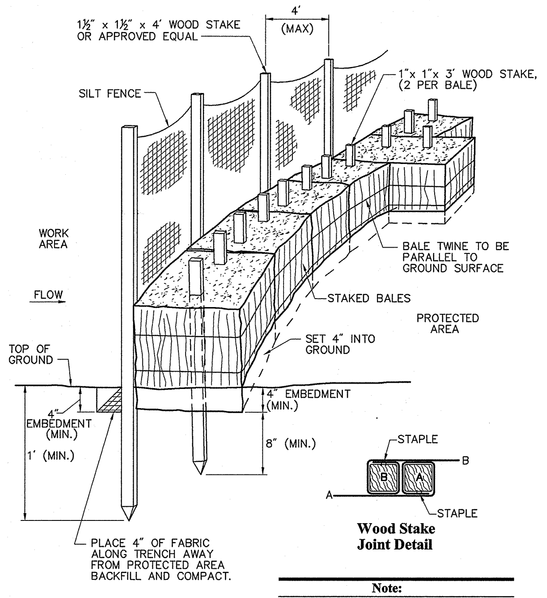

Wood Stake Joint Detail

Note:

PLACE ONE HAY BALE PERPENDICULAR ALONG HAY BALE BARRIER (100' O.C.).

Silt Fence / Hay Bale Barrier (Embedded)
N.T.S. Source: VHB 6/03 LD_654

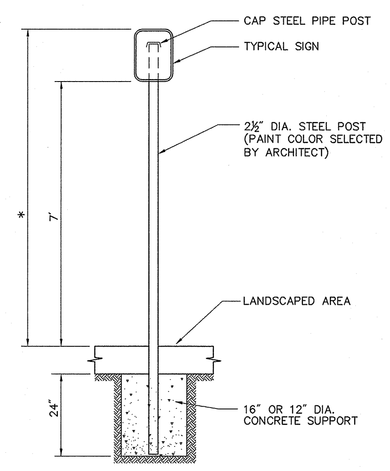

* THIS DIMENSION SHALL BE A MINIMUM OF 5' AND A MAXIMUM OF 8' FOR ACCESSIBLE SIGNAGE IN THE COMMONWEALTH OF MASSACHUSETTS.

Sign Post - Type 'A'
N.T.S. Source: VHB 11/05 LD_701

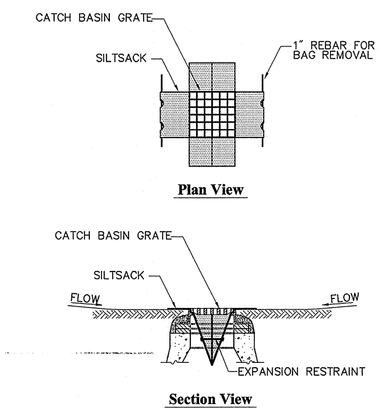

Notes:

1. INSTALL SILTSACK IN ALL CATCH BASINS WHERE INDICATED ON THE PLAN BEFORE COMMENCING WORK OR IN PAVED AREAS AFTER BINDER COURSE IS PLACED AND HAY BALES HAVE BEEN REMOVED.
2. GRATE TO BE PLACED OVER SILTSACK.
3. SILTSACK SHALL BE INSPECTED PERIODICALLY AND AFTER ALL STORM EVENTS AND CLEANING OR REPLACEMENT SHALL BE PERFORMED PROMPTLY AS NEEDED. MAINTAIN UNTIL UPSTREAM AREAS HAVE BEEN PERMANENTLY STABILIZED

Siltsack Sediment Trap
N.T.S. Source: VHB 6/03 LD_674

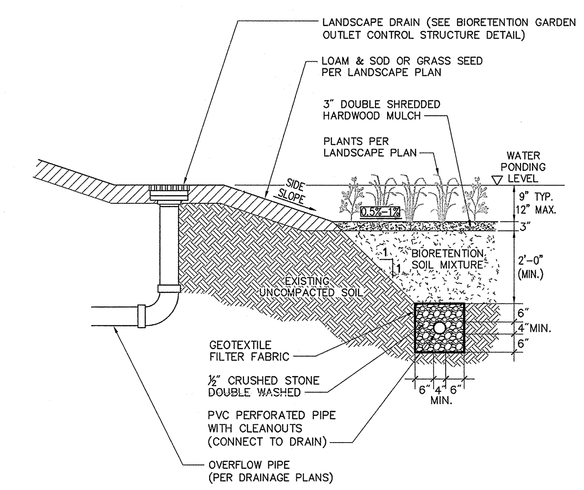

Notes:

1. INSTALL SUB-DRAINS 10 FEET ON CENTER. CONNECT TO DRAIN LINE.
2. SIDE SLOPES SHALL BE 3:1 MAX. 2% MIN.
3. SEE GRADING AND DRAINAGE PLAN FOR LOCATIONS AND INVERTS OF OVERFLOW OUTLETS AND SUBDRAIN CONNECTIONS.

Bioretention Garden with Subdrain
N.T.S. Source: VHB REV

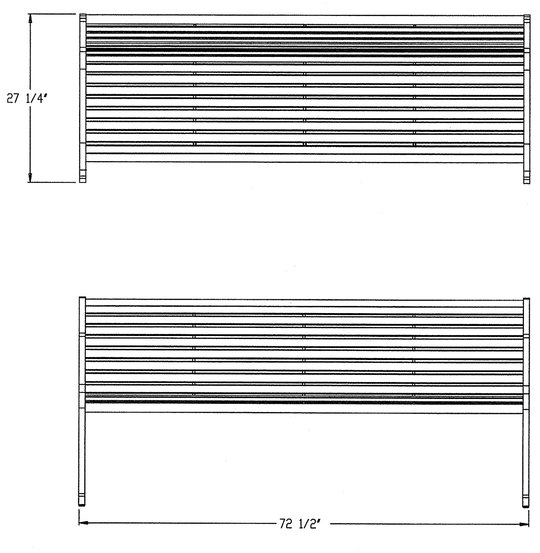

landscapeforms
431 LAWNDALE AVE. PHONE: 800-521-2546
KALAMAZOO, MI 49048 FAX: 269-381-3455

CONFIDENTIAL DRAWING INFORMATION CONTAINED HEREIN IS THE PROPERTY OF LANDSCAPE FORMS, INC. INTENDED USE IS LIMITED TO DESIGN PROFESSIONALS SPECIFYING LANDSCAPE FORMS, INC. PRODUCTS AND THEIR DIRECT CLIENTS. DRAWING IS NOT TO BE COPIED OR DISCLOSED TO OTHERS WITHOUT THE CONSENT OF LANDSCAPE FORMS, INC.
©1994 LANDSCAPE FORMS, INC. ALL RIGHTS RESERVED.

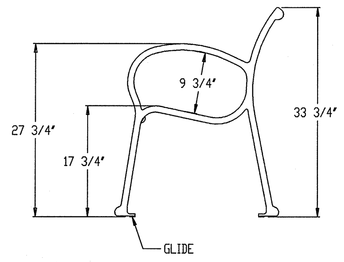

TITLE: SCARBOROUGH 72" FREESTANDING BACKED BENCH - STRAP
DESIGN: SCARBOROUGH
PATENT:
FILE: SC175-03
DATE: 09-01-94
AUTHOR: LAB

Rolling Bike Rack (Typical)
N.T.S. Source: DERO

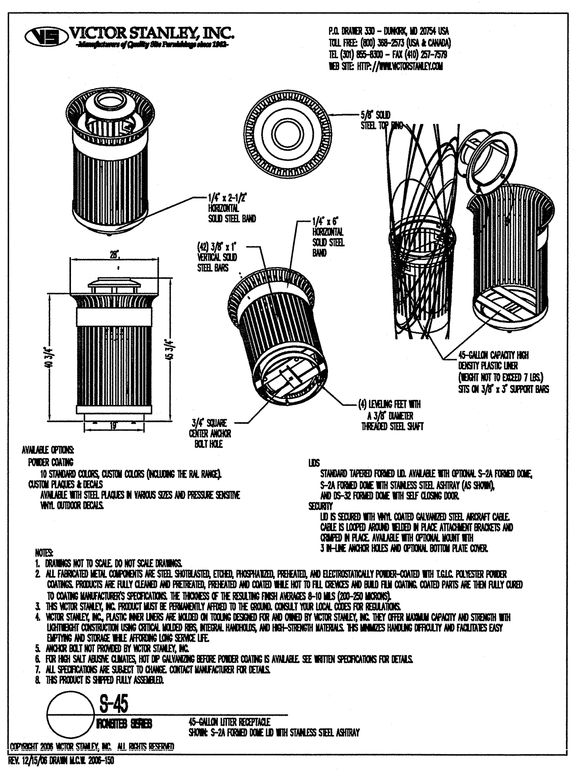

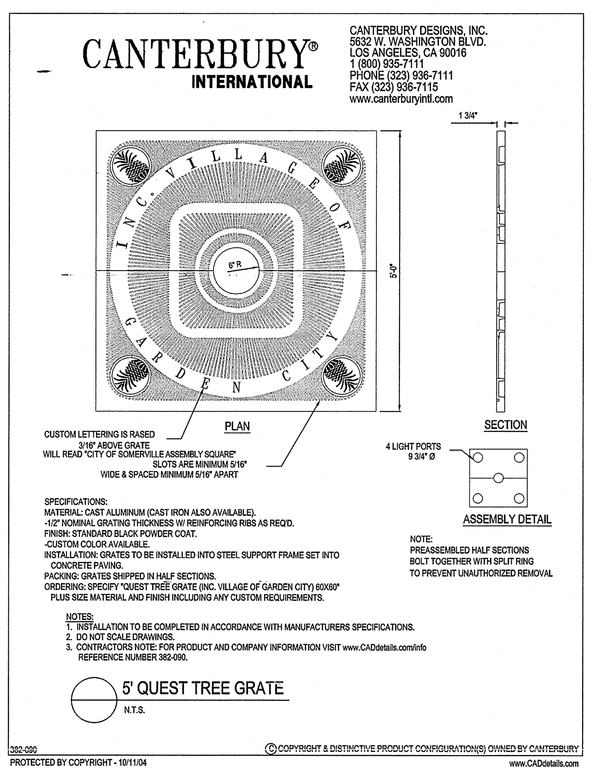

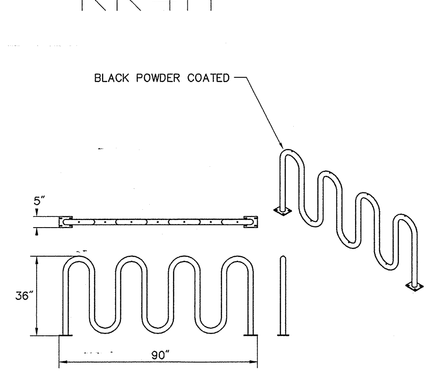

Notes:

1. INSTALLATION TO BE COMPLETED IN ACCORDANCE WITH MANUFACTURERS SPECIFICATIONS.

No.	Revision	Date	Appvd.

Designed by | Drawn by | Checked by
CAD checked by | Approved by
Scale As Noted | Date July 20, 2007

Project Title
Phase 1-AA
IKEA
Assembly Square Drive
Somerville, Massachusetts

Issued for
Final Level PUD Approval

Not Approved for Construction
Drawing Title
Detail Sheet 3

Drawing Number
C-12
Sheet 13 of 13
Project Number 08518.03

COMMONWEALTH OF MASSACHUSETTS KENDALL M. CARDWELL Civil No. 046447 REGISTERED PROFESSIONAL ENGINEER
7-20-07

08518.03-PHASE 1AA-DT.DWG

VHB
Vanasse Hangen Brustlin, Inc.
Transportation
Land Development
Environmental Services

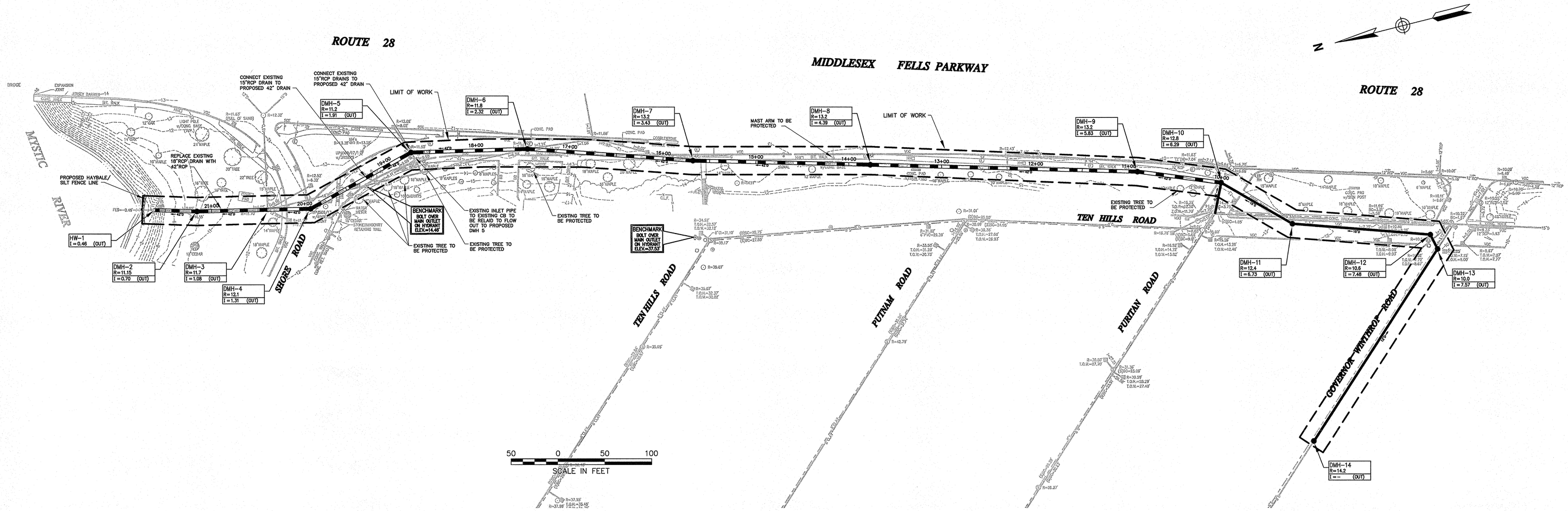

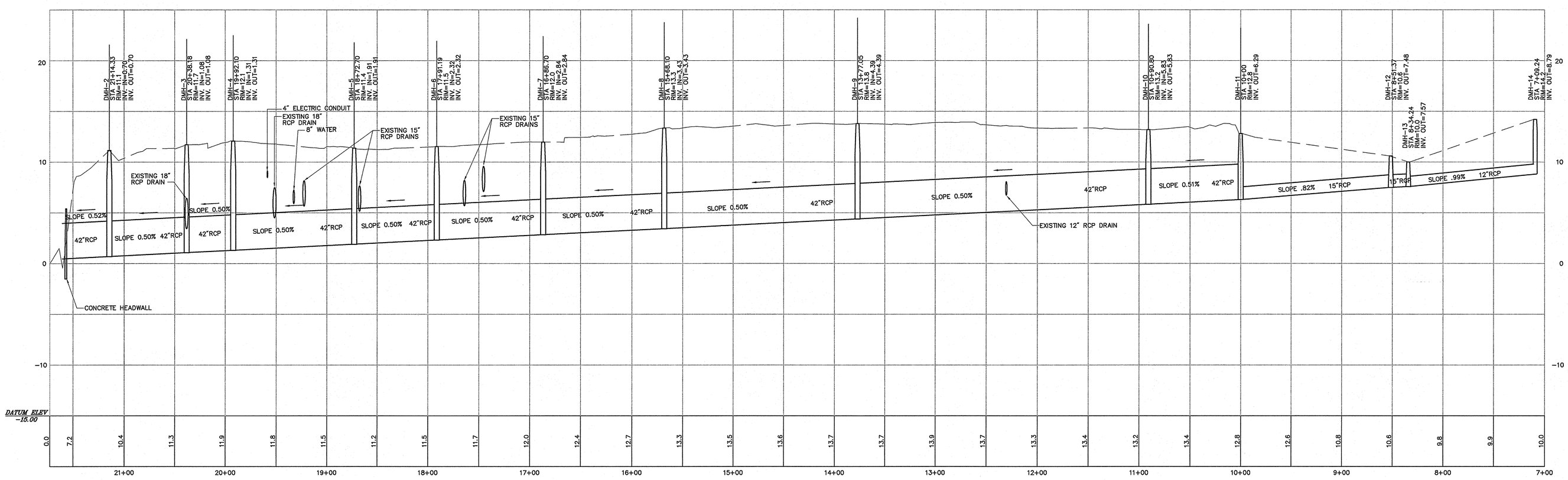

50 0 50 100
4 0 4 8
SCALE IN FEET

GENERAL NOTES:

THIS PLAN WAS PREPARED USING AVAILABLE SITE INFORMATION FROM SEVERAL SOURCES, SOME OF WHICH MAY BE UNCONFIRMED, AND REPRESENTS A CONCEPTUAL SITE DEVELOPMENT PLAN BASED ON A PRELIMINARY REVIEW OF ZONING, PERMITTING AND REGULATORY REQUIREMENTS. THE EXISTING CONDITIONS SHOWN ON THIS PLAN WERE LOCATED BY AN ACTUAL FIELD SURVEY CONDUCTED BETWEEN DECEMBER 19-23, 2002 BY VANASSE HANGEN BRUSTLIN, INC.

No.	Revision	Date	Appvd.

Designed by | Drawn by | Checked by
CAD checked by | Approved by
Scale 1"=40' | Date

Project Title
PUD
Off Site Mitigation
Middlesex Fells Parkway
Somerville, Massachusetts

Issued for
Not Approved for Construction

Drawing Title
Drain Profile
Plan

Drawing Number
I-I

Sheet 1 of 1

Project Number
08518.03

VHB
Vanasse Hangen Brustlin, Inc.
Transportation
Land Development
Environmental Services
101 Walnut Street, P.O. Box 9151
Watertown, Massachusetts 02471
617 924 1770 â FAX 617 924 2286

ENGINEERING ADVANTAGE, INC.
2 PARK STREET
BOSTON, MASSACHUSETTS 02122
PHONE: (617) 288-3969
FAX: (617) 825-8922

GREENBRIAR FLAT LENS

LSI INDUSTRIES™
10900 ALLIANCE RD. P.O. BOX 42700 CINCINNATI, OHIO 45242
(513) 793-3200 • FAX (513) 793-6003

LIGHTING PROPOSAL FOR

IKEA

SOMMERVILLE, MA.

SCALE:1"=30'	LD-85392-1
DATE:5/3/07	
BY:S.W.W	SHEET 1 OF 1

Statistical Area Summary

Label	Avg	Max	Min	Avg/Min	Max/Min
CURB AREA SUMMARY	4.98	10.1	2.0	2.49	5.05

Luminaire Schedule

Symbol	Qty	Label	Arrangement	Lumens	LLF	Description	Total Watts
	5	E	SINGLE	110000	1.000	GFR 2 1000 MHR F 2HSS 35' POLE 3' BASE	1080
	7	PT	SINGLE	110000	1.000	GFPR 5 1000 MHR F 35' POLE 3' BASE	1080

SITE LIGHTING FIXTURE SCHEDULE:
ALL EQUIPMENT IS L.S.I.

TYPE 'E'
POLE: RTPBO-S11G-35-S-BLK
FIXTURES: 1@ GFR-2-1000MHR-F-480-BLK-HSS
1-1000 WATT METAL HALIDE -
TYPE 2 DISTRIBUTION
W/ HOUSE SIDE SHIELD

TYPE 'G'
POLE: RTPBO-S11G-35-S-BLK W/ADAPTER
FIXTURES: 1@ GFPR-5-1000MHR-F-480-BLK
1-1000 WATT METAL HALIDE -
TYPE 5 DISTRIBUTION POST TOP

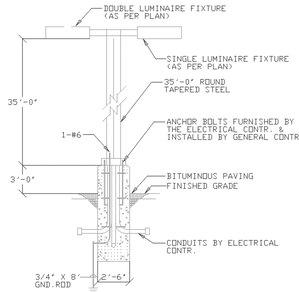

NOTE:
SEE CIVIL DRAWINGS FOR
SIZE OF POLE BASE.

LIGHTING POLE BASE DETAIL
NOT TO SCALE

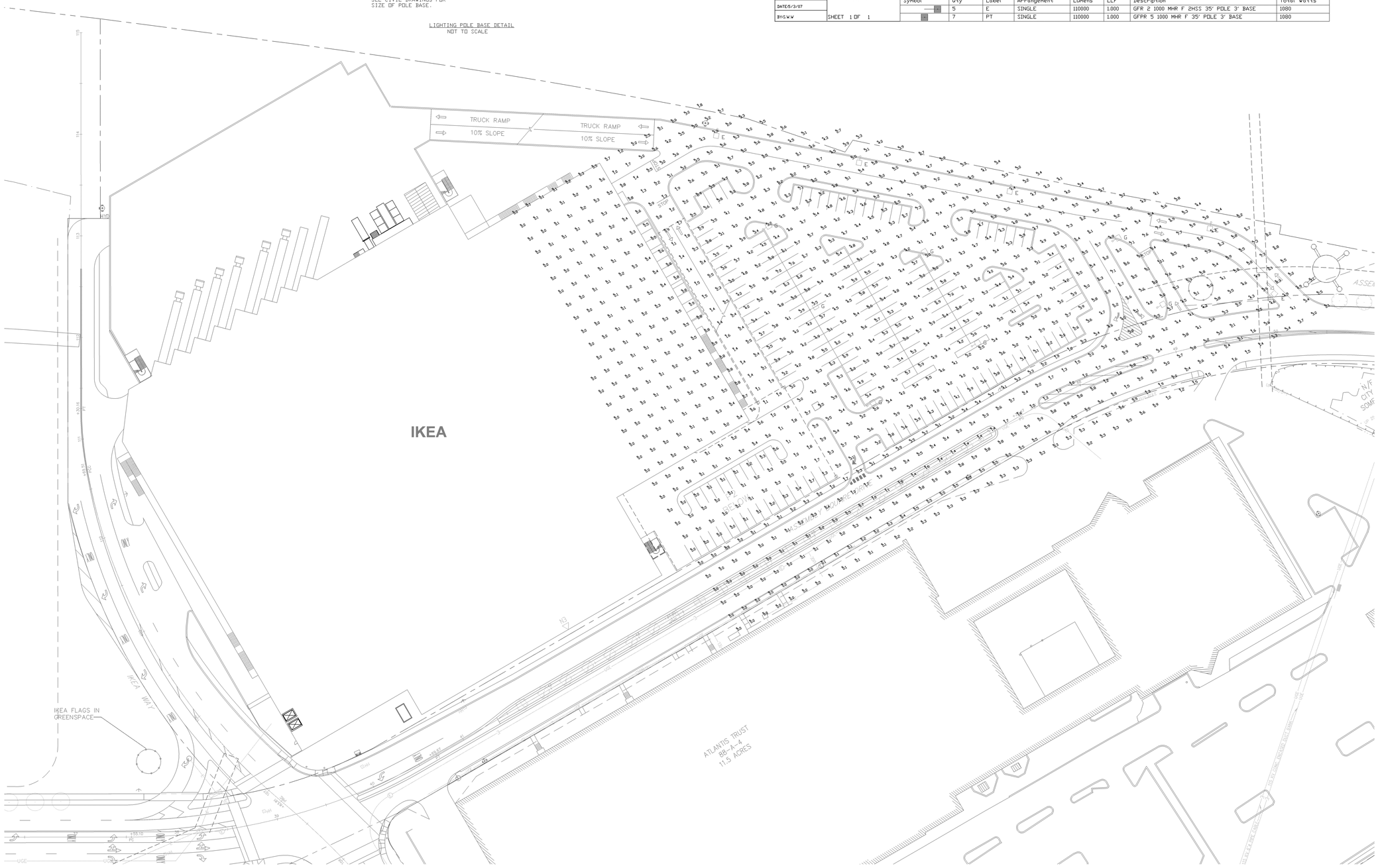

No.	Revision	Date	Appvd.

Designed by LAF | Drawn by CJC | Checked by LAF
CAD checked by | Approved by
Scale 1"=40' | Date May 2, 2007

Project Title
Phase 1-AA
IKEA
Assembly Square Drive
Somerville, Massachusetts

Issued for
Not Approved for Construction

Drawing Title
Site Lighting Plan

Drawing Number
SL-1

Progress Print

Sheet of

Project Number
08518.03

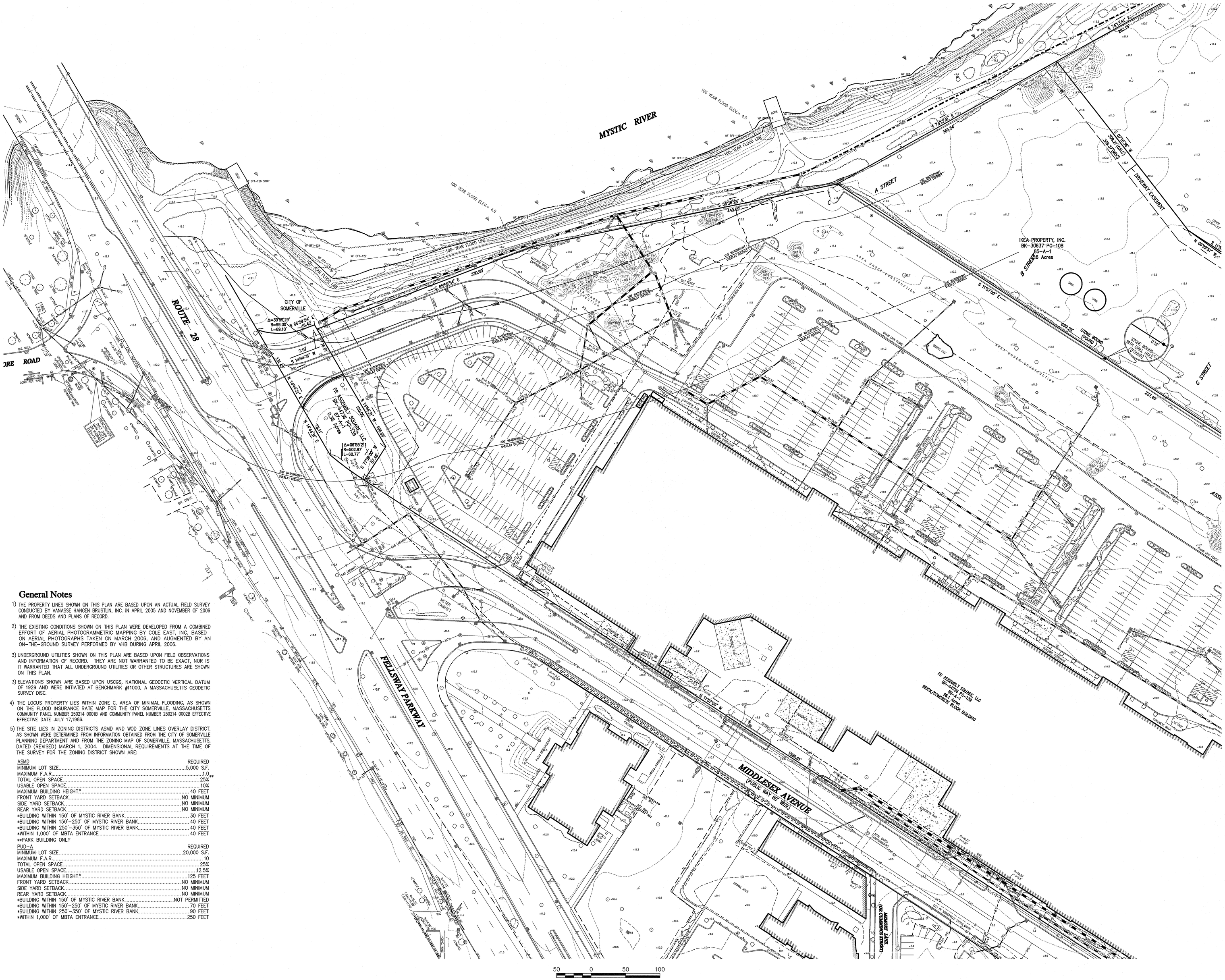

General Notes

1) THE PROPERTY LINES SHOWN ON THIS PLAN ARE BASED UPON AN ACTUAL FIELD SURVEY CONDUCTED BY VANASSE HANGEN BRUSTLIN, INC. IN APRIL 2005 AND NOVEMBER OF 2006 AND FROM DEEDS AND PLANS OF RECORD.

2) THE EXISTING CONDITIONS SHOWN ON THIS PLAN WERE DEVELOPED FROM A COMBINED EFFORT OF AERIAL PHOTOGRAMMETRIC MAPPING BY COLE EAST, INC, BASED ON AERIAL PHOTOGRAPHS TAKEN ON MARCH 2006, AND AUGMENTED BY AN ON-THE-GROUND SURVEY PERFORMED BY VHB DURING APRIL 2006.

3) UNDERGROUND UTILITIES SHOWN ON THIS PLAN ARE BASED UPON FIELD OBSERVATIONS AND INFORMATION OF RECORD. THEY ARE NOT WARRANTED TO BE EXACT, NOR IS IT WARRANTED THAT ALL UNDERGROUND UTILITIES OR OTHER STRUCTURES ARE SHOWN ON THIS PLAN.

3) ELEVATIONS SHOWN ARE BASED UPON USCGS, NATIONAL GEODETIC VERTICAL DATUM OF 1929 AND WERE INITIATED AT BENCHMARK #11000, A MASSACHUSETTS GEODETIC SURVEY DISC.

4) THE LOCUS PROPERTY LIES WITHIN ZONE C, AREA OF MINIMAL FLOODING, AS SHOWN ON THE FLOOD INSURANCE RATE MAP FOR THE CITY SOMERVILLE, MASSACHUSETTS COMMUNITY PANEL NUMBER 250214 0001B AND COMMUNITY PANEL NUMBER 250214 0002B EFFECTIVE EFFECTIVE DATE JULY 17,1986.

5) THE SITE LIES IN ZONING DISTRICTS ASMD AND WOD ZONE LINES OVERLAY DISTRICT. AS SHOWN WERE DETERMINED FROM INFORMATION OBTAINED FROM THE CITY OF SOMERVILLE PLANNING DEPARTMENT AND FROM THE ZONING MAP OF SOMERVILLE, MASSACHUSETTS, DATED (REVISED) MARCH 1, 2004. DIMENSIONAL REQUIREMENTS AT THE TIME OF THE SURVEY FOR THE ZONING DISTRICT SHOWN ARE:

ASMD	REQUIRED
MINIMUM LOT SIZE	5,000 S.F.
MAXIMUM F.A.R.	1.0
TOTAL OPEN SPACE	25%**
USABLE OPEN SPACE	10%
MAXIMUM BUILDING HEIGHT*	40 FEET
FRONT YARD SETBACK	NO MINIMUM
SIDE YARD SETBACK	NO MINIMUM
REAR YARD SETBACK	NO MINIMUM
*BUILDING WITHIN 150' OF MYSTIC RIVER BANK	30 FEET
*BUILDING WITHIN 150'-250' OF MYSTIC RIVER BANK	40 FEET
*BUILDING WITHIN 250'-350' OF MYSTIC RIVER BANK	40 FEET
*WITHIN 1,000' OF MBTA ENTRANCE	40 FEET

**PARK BUILDING ONLY

PUD-A	REQUIRED
MINIMUM LOT SIZE	20,000 S.F.
MAXIMUM F.A.R.	10
TOTAL OPEN SPACE	25%
USABLE OPEN SPACE	12.5%
MAXIMUM BUILDING HEIGHT*	125 FEET
FRONT YARD SETBACK	NO MINIMUM
SIDE YARD SETBACK	NO MINIMUM
REAR YARD SETBACK	NO MINIMUM
*BUILDING WITHIN 150' OF MYSTIC RIVER BANK	NOT PERMITTED
*BUILDING WITHIN 150'-250' OF MYSTIC RIVER BANK	70 FEET
*BUILDING WITHIN 250'-350' OF MYSTIC RIVER BANK	90 FEET
*WITHIN 1,000' OF MBTA ENTRANCE	250 FEET

VHB

Vanasse Hangen Brustlin, Inc.

Transportation
Land Development
Environmental Services

101 Walnut Street, P.O. Box 9151
Watertown, Massachusetts 02471-9151
617 924 1770 • FAX 617 924 2286

N
MASS GRID

Legend

- DRAIN MANHOLE
- CATCH BASIN
- SEWER MANHOLE
- ELECTRIC MANHOLE
- TELEPHONE MANHOLE
- MANHOLE
- HANDHOLE
- WATER GATE
- FIRE HYDRANT
- GAS GATE
- STREET SIGN
- LIGHT POLE
- UTILITY POLE
- GUY WIRE
- GUY POLE
- FFE=32.18' FIRST FLOOR ELEVATION
- MONITORING WELL
- EOP EDGE OF PAVEMENT
- CC CONCRETE CURB
- VGC VERTICAL GRANITE CURB
- SGE SLOPED GRANITE EDGE
- BB BITUMINOUS BERM
- GUARD RAIL
- CHAIN LINK FENCE
- DRAINAGE LINE
- SEWER LINE
- OHW OVERHEAD WIRE
- E UNDERGROUND ELECTRIC
- T TELEPHONE LINE
- G GAS LINE
- W WATER LINE
- STONEWALL
- TREELINE
- 100'BZ 100-FT BUFFER ZONE
- 100'RA 100-FT RIVERFRONT AREA
- 200'RA 200-FT RIVERFRONT AREA
- AFI-100 LIMIT MEAN ANNUAL HIGH WATER
- BFI-100 LIMIT OF BANK
- WFI-100 VEGETATED WETLAND BOUNDARY

No.	Revision	Date	Appvd.
3	Wetlands & General Notes	July 2007	
2	Easement & Property	OCT 2006	
1	DRAINAGE UPDATE	MAY 2006	

Designed by | Drawn by | Checked by
CAD checked by | Approved by
Scale 1"=50' | Date February 1, 2006

Project Title
Assembly Square

Somerville, Massachusetts
Issued for

Drawing Title
Existing Conditions Plan of Land

Drawing Number
Sv-1

COMMONWEALTH OF MASSACHUSETTS
RUSSELL BOUSQUET NO. 35397
PROFESSIONAL LAND SURVEYOR
7/9/07

1 5

08518

\\Mawald\d\08518\cad\sr\planset\08518_AE.dwg

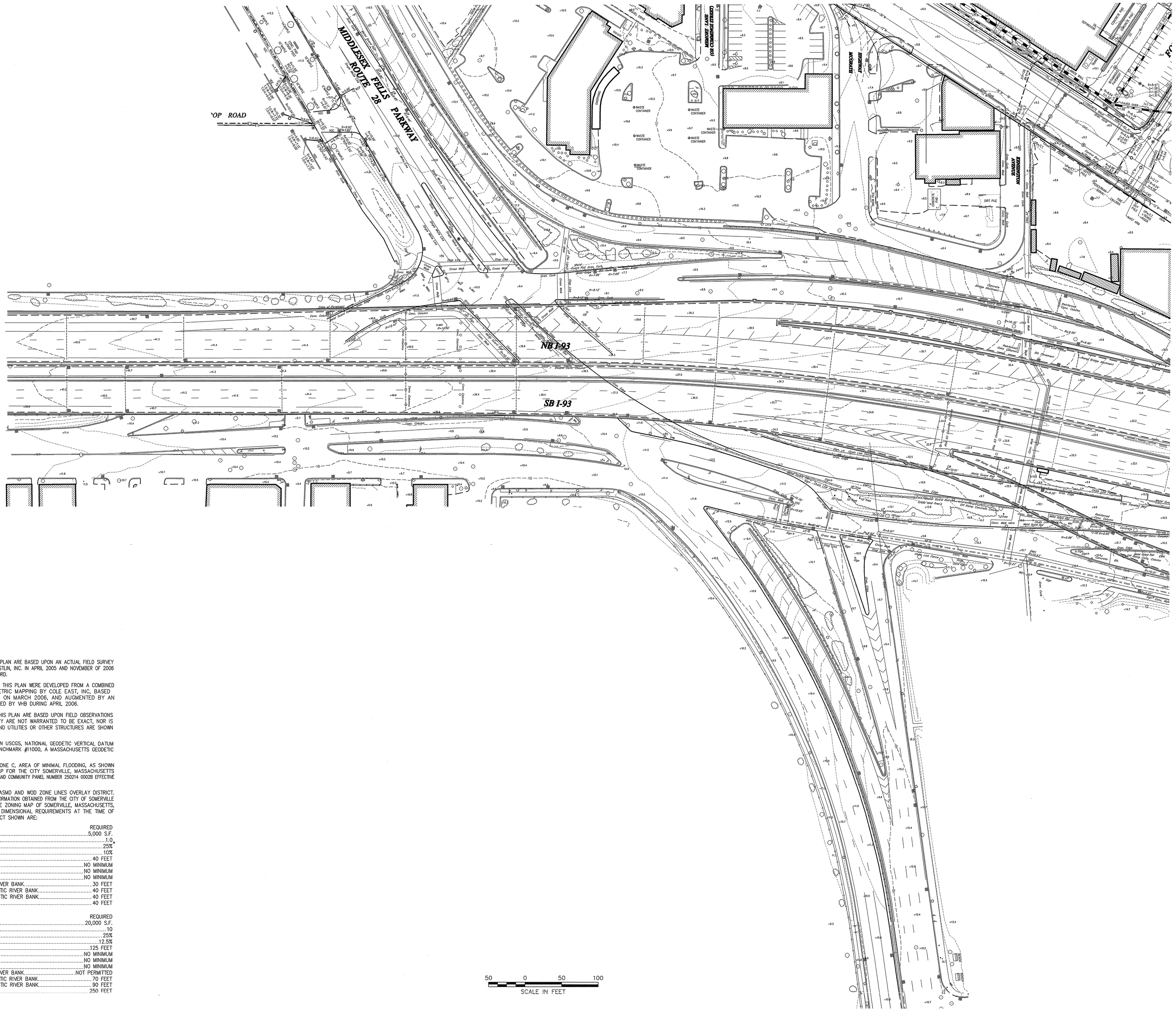

General Notes

1) THE PROPERTY LINES SHOWN ON THIS PLAN ARE BASED UPON AN ACTUAL FIELD SURVEY CONDUCTED BY VANASSE HANGEN BRUSTLIN, INC. IN APRIL 2005 AND NOVEMBER OF 2006 AND FROM DEEDS AND PLANS OF RECORD.

2) THE EXISTING CONDITIONS SHOWN ON THIS PLAN WERE DEVELOPED FROM A COMBINED EFFORT OF AERIAL PHOTOGRAMMETRIC MAPPING BY COLE EAST, INC, BASED ON AERIAL PHOTOGRAPHS TAKEN ON MARCH 2006, AND AUGMENTED BY AN ON-THE-GROUND SURVEY PERFORMED BY VHB DURING APRIL 2006.

3) UNDERGROUND UTILITIES SHOWN ON THIS PLAN ARE BASED UPON FIELD OBSERVATIONS AND INFORMATION OF RECORD. THEY ARE NOT WARRANTED TO BE EXACT, NOR IS IT WARRANTED THAT ALL UNDERGROUND UTILITIES OR OTHER STRUCTURES ARE SHOWN ON THIS PLAN.

3) ELEVATIONS SHOWN ARE BASED UPON USCGS, NATIONAL GEODETIC VERTICAL DATUM OF 1929 AND WERE INITIATED AT BENCHMARK #11000, A MASSACHUSETTS GEODETIC SURVEY DISC.

4) THE LOCUS PROPERTY LIES WITHIN ZONE C, AREA OF MINIMAL FLOODING, AS SHOWN ON THE FLOOD INSURANCE RATE MAP FOR THE CITY SOMERVILLE, MASSACHUSETTS COMMUNITY PANEL NUMBER 250214 0001B AND COMMUNITY PANEL NUMBER 250214 0002B EFFECTIVE EFFECTIVE DATE JULY 17,1986.

5) THE SITE LIES IN ZONING DISTRICTS ASMD AND WOD ZONE LINES OVERLAY DISTRICT. AS SHOWN WERE DETERMINED FROM INFORMATION OBTAINED FROM THE CITY OF SOMERVILLE PLANNING DEPARTMENT AND FROM THE ZONING MAP OF SOMERVILLE, MASSACHUSETTS, DATED (REVISED) MARCH 1, 2004. DIMENSIONAL REQUIREMENTS AT THE TIME OF THE SURVEY FOR THE ZONING DISTRICT SHOWN ARE:

ASMD	REQUIRED
MINIMUM LOT SIZE	5,000 S.F.
MAXIMUM F.A.R.	1.0
TOTAL OPEN SPACE	25%*
USABLE OPEN SPACE	10%
MAXIMUM BUILDING HEIGHT**	40 FEET
FRONT YARD SETBACK	NO MINIMUM
SIDE YARD SETBACK	NO MINIMUM
REAR YARD SETBACK	NO MINIMUM
*BUILDING WITHIN 150' OF MYSTIC RIVER BANK	30 FEET
*BUILDING WITHIN 150'-250' OF MYSTIC RIVER BANK	40 FEET
*BUILDING WITHIN 250'-350' OF MYSTIC RIVER BANK	40 FEET
*WITHIN 1,000' OF MBTA ENTRANCE	40 FEET

**PARK BUILDING ONLY

PUD-A	REQUIRED
MINIMUM LOT SIZE	20,000 S.F.
MAXIMUM F.A.R.	10
TOTAL OPEN SPACE	25%
USABLE OPEN SPACE	12.5%
MAXIMUM BUILDING HEIGHT**	125 FEET
FRONT YARD SETBACK	NO MINIMUM
SIDE YARD SETBACK	NO MINIMUM
REAR YARD SETBACK	NO MINIMUM
*BUILDING WITHIN 150' OF MYSTIC RIVER BANK	NOT PERMITTED
*BUILDING WITHIN 150'-250' OF MYSTIC RIVER BANK	70 FEET
*BUILDING WITHIN 250'-350' OF MYSTIC RIVER BANK	90 FEET
*WITHIN 1,000' OF MBTA ENTRANCE	250 FEET

VHB

Vanasse Hangen Brustlin, Inc.

Transportation
Land Development
Environmental Services

101 Walnut Street, P.O. Box 9151
Watertown, Massachusetts 02471-9151
617 924 1770 • FAX 617 924 2286

N
MASS. GRID

Legend

- DRAIN MANHOLE
- CATCH BASIN
- SEWER MANHOLE
- ELECTRIC MANHOLE
- TELEPHONE MANHOLE
- MANHOLE
- HH HANDHOLE
- WATER GATE
- FIRE HYDRANT
- GAS GATE
- STREET SIGN
- LIGHT POLE
- UTILITY POLE
- GUY WIRE
- GUY POLE
- 4 FFE=32.18 FIRST FLOOR ELEVATION
- MW MONITORING WELL
- EOP EDGE OF PAVEMENT
- CC CONCRETE CURB
- VGC VERTICAL GRANITE CURB
- SGE SLOPED GRANITE EDGE
- BB BITUMINOUS BERM
- GUARD RAIL
- CHAIN LINK FENCE
- DRAINAGE LINE
- SEWER LINE
- OHW OVERHEAD WIRE
- E UNDERGROUND ELECTRIC
- T TELEPHONE LINE
- G GAS LINE
- W WATER LINE
- STONEWALL
- TREELINE
- 100'BZ 100-FT BUFFER ZONE
- 100'RA 100-FT RIVERFRONT AREA
- 200'RA 200-FT RIVERFRONT AREA
- AF1-100 LIMIT MEAN ANNUAL HIGH WATER
- BF1-100 LIMIT OF BANK
- WF1-100 VEGETATED WETLAND BOUNDARY

No.	Revision	Date	Appvd.
3	Wetlands & General Notes	July 2007	
2	Easement & Property	OCT 2006	
1	DRAINAGE UPDATE	MAY 2006	

Designed by		Drawn by	Checked by
CAD checked by		Approved by	
Scale	1"=50'	Date	February 1, 2006

Project Title

Assembly Square

Somerville, Massachusetts

Issued for

Drawing Title

Existing Conditions Plan of Land

Drawing Number

Sv-2

COMMONWEALTH OF MASSACHUSETTS
RUSSELL J. BOUSQUET
NO. 35387
PROFESSIONAL LAND SURVEYOR

7/17/07

2 5

08518

\\Mawald\d\08518\cad\sr\planset\08518_AE.dwg

General Notes

1) THE PROPERTY LINES SHOWN ON THIS PLAN ARE BASED UPON AN ACTUAL FIELD SURVEY CONDUCTED BY VANASSE HANGEN BRUSTLIN, INC. IN APRIL 2005 AND NOVEMBER OF 2006 AND FROM DEEDS AND PLANS OF RECORD.

2) THE EXISTING CONDITIONS SHOWN ON THIS PLAN WERE DEVELOPED FROM A COMBINED EFFORT OF AERIAL PHOTOGRAMMETRIC MAPPING BY COLE EAST, INC, BASED ON AERIAL PHOTOGRAPHS TAKEN ON MARCH 2006, AND AUGMENTED BY AN ON-THE-GROUND SURVEY PERFORMED BY VHB DURING APRIL 2006.

3) UNDERGROUND UTILITIES SHOWN ON THIS PLAN ARE BASED UPON FIELD OBSERVATIONS AND INFORMATION OF RECORD. THEY ARE NOT WARRANTED TO BE EXACT, NOR IS IT WARRANTED THAT ALL UNDERGROUND UTILITIES OR OTHER STRUCTURES ARE SHOWN ON THIS PLAN.

3) ELEVATIONS SHOWN ARE BASED UPON USCGS, NATIONAL GEODETIC VERTICAL DATUM OF 1929 AND WERE INITIATED AT BENCHMARK #11000, A MASSACHUSETTS GEODETIC SURVEY DISC.

4) THE LOCUS PROPERTY LIES WITHIN ZONE C, AREA OF MINIMAL FLOODING, AS SHOWN ON THE FLOOD INSURANCE RATE MAP FOR THE CITY SOMERVILLE, MASSACHUSETTS COMMUNITY PANEL NUMBER 250214 0001B AND COMMUNITY PANEL NUMBER 250214 0002B EFFECTIVE EFFECTIVE DATE JULY 17,1986.

5) THE SITE LIES IN ZONING DISTRICTS ASMD AND WOD ZONE LINES OVERLAY DISTRICT. AS SHOWN WERE DETERMINED FROM INFORMATION OBTAINED FROM THE CITY OF SOMERVILLE PLANNING DEPARTMENT AND FROM THE ZONING MAP OF SOMERVILLE, MASSACHUSETTS, DATED (REVISED) MARCH 1, 2004. DIMENSIONAL REQUIREMENTS AT THE TIME OF THE SURVEY FOR THE ZONING DISTRICT SHOWN ARE:

ASMD	REQUIRED
MINIMUM LOT SIZE	5,000 S.F.
MAXIMUM F.A.R.	1.0
TOTAL OPEN SPACE	25%
USABLE OPEN SPACE	10%
MAXIMUM BUILDING HEIGHT.*	40 FEET
FRONT YARD SETBACK	NO MINIMUM
SIDE YARD SETBACK	NO MINIMUM
REAR YARD SETBACK	NO MINIMUM
*BUILDING WITHIN 150' OF MYSTIC RIVER BANK	30 FEET
*BUILDING WITHIN 150'-250' OF MYSTIC RIVER BANK	40 FEET
*BUILDING WITHIN 250'-350' OF MYSTIC RIVER BANK	40 FEET
*WITHIN 1,000' OF MBTA ENTRANCE	40 FEET
**PARK BUILDING ONLY	

PUD-A	REQUIRED
MINIMUM LOT SIZE	20,000 S.F.
MAXIMUM F.A.R.	10
TOTAL OPEN SPACE	25%
USABLE OPEN SPACE	12.5%
MAXIMUM BUILDING HEIGHT.*	125 FEET
FRONT YARD SETBACK	NO MINIMUM
SIDE YARD SETBACK	NO MINIMUM
REAR YARD SETBACK	NO MINIMUM
*BUILDING WITHIN 150' OF MYSTIC RIVER BANK	NOT PERMITTED
*BUILDING WITHIN 150'-250' OF MYSTIC RIVER BANK	70 FEET
*BUILDING WITHIN 250'-350' OF MYSTIC RIVER BANK	90 FEET
*WITHIN 1,000' OF MBTA ENTRANCE	250 FEET

PROPERTY LINE DETAIL
SCALE: 1"=25'

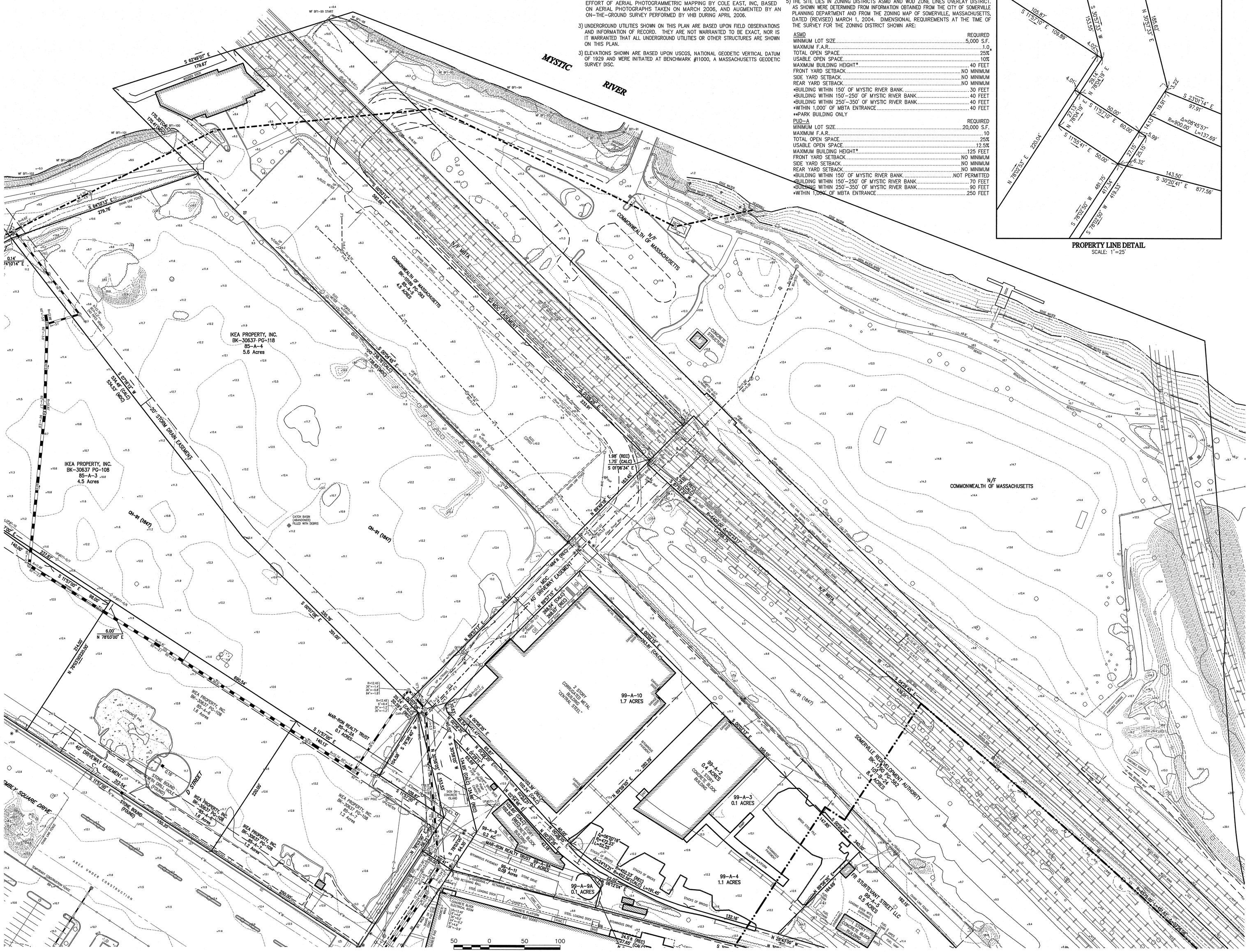

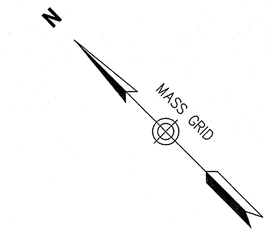

Legend

- DRAIN MANHOLE
- CATCH BASIN
- SEWER MANHOLE
- ELECTRIC MANHOLE
- TELEPHONE MANHOLE
- MANHOLE
- HANDHOLE
- WATER GATE
- FIRE HYDRANT
- GAS GATE
- STREET SIGN
- LIGHT POLE
- UTILITY POLE
- GUY WIRE
- GUY POLE
- FFE=32.18 FIRST FLOOR ELEVATION
- MW MONITORING WELL
- EDGE OF PAVEMENT
- CONCRETE CURB
- VERTICAL GRANITE CURB
- SLOPED GRANITE EDGE
- BITUMINOUS BERM
- GUARD RAIL
- CHAIN LINK FENCE
- DRAINAGE LINE
- SEWER LINE
- OHW OVERHEAD WIRE
- E UNDERGROUND ELECTRIC
- T TELEPHONE LINE
- G GAS LINE
- W WATER LINE
- STONEWALL
- TREELINE
- 100'BZ 100-FT BUFFER ZONE
- 100'RA 100-FT RIVERFRONT AREA
- 200'RA 200-FT RIVERFRONT AREA
- AF1-100 LIMIT MEAN ANNUAL HIGH WATER
- BF1-100 LIMIT OF BANK
- WF1-100 VEGETATED WETLAND BOUNDARY

VHB
Vanasse Hangen Brustlin, Inc.

Transportation
Land Development
Environmental Services

101 Walnut Street, P.O. Box 9151
Watertown, Massachusetts 02471-9151
617 924 1770 • FAX 617 924 2286

No.	Revision	Date	Appvd.
3	Wetlands & General Notes	July 2007	
2	Easement & Property	OCT 2006	
1	DRAINAGE UPDATE	MAY 2006	

Designed by	Drawn by	Checked by
CAD checked by	Approved by	
Scale 1"=50'	Date February 1, 2006	

Project Title
Assembly Square

Somerville, Massachusetts
Issued for

Drawing Title
Existing Conditions
Plan of Land

COMMONWEALTH OF MASSACHUSETTS
RUSSELL DOUGHERTY
NO. 35389
LAND SURVEYOR
7/19/07

Drawing Number
Sv-3

3 5

08518

\\Mawald\d\08518\cad\sr\planset\08518_AE.dwg

VHB

Vanasse Hangen Brustlin, Inc.

Transportation
Land Development
Environmental Services

101 Walnut Street, P.O. Box 9151
Watertown, Massachusetts 02471-9151
617 924 1770 • FAX 617 924 2286

N
MASS GRID

Legend

- DRAIN MANHOLE
- CATCH BASIN
- SEWER MANHOLE
- ELECTRIC MANHOLE
- TELEPHONE MANHOLE
- MANHOLE
- HANDHOLE
- WATER GATE
- FIRE HYDRANT
- GAS GATE
- STREET SIGN
- LIGHT POLE
- UTILITY POLE
- GUY WIRE
- GUY POLE
- FFE=32.18' FIRST FLOOR ELEVATION
- MONITORING WELL
- EOP EDGE OF PAVEMENT
- CC CONCRETE CURB
- VGC VERTICAL GRANITE CURB
- SGE SLOPED GRANITE EDGE
- BB BITUMINOUS BERM
- GUARD RAIL
- CHAIN LINK FENCE
- DRAINAGE LINE
- SEWER LINE
- OHW OVERHEAD WIRE
- E UNDERGROUND ELECTRIC
- T TELEPHONE LINE
- G GAS LINE
- W WATER LINE
- STONEWALL
- TREELINE
- 100'BZ 100-FT BUFFER ZONE
- 100'RA 100-FT RIVERFRONT AREA
- 200'RA 200-FT RIVERFRONT AREA
- AF1-100 LIMIT MEAN ANNUAL HIGH WATER
- BF1-100 LIMIT OF BANK
- WF1-100 VEGETATED WETLAND BOUNDARY

General Notes

1) THE PROPERTY LINES SHOWN ON THIS PLAN ARE BASED UPON AN ACTUAL FIELD SURVEY CONDUCTED BY VANASSE HANGEN BRUSTLIN, INC. IN APRIL 2005 AND NOVEMBER OF 2006 AND FROM DEEDS AND PLANS OF RECORD.

2) THE EXISTING CONDITIONS SHOWN ON THIS PLAN WERE DEVELOPED FROM A COMBINED EFFORT OF AERIAL PHOTOGRAMMETRIC MAPPING BY COLE EAST, INC, BASED ON AERIAL PHOTOGRAPHS TAKEN ON MARCH 2006, AND AUGMENTED BY AN ON-THE-GROUND SURVEY PERFORMED BY VHB DURING APRIL 2006.

3) UNDERGROUND UTILITIES SHOWN ON THIS PLAN ARE BASED UPON FIELD OBSERVATIONS AND INFORMATION OF RECORD. THEY ARE NOT WARRANTED TO BE EXACT, NOR IS IT WARRANTED THAT ALL UNDERGROUND UTILITIES OR OTHER STRUCTURES ARE SHOWN ON THIS PLAN.

3) ELEVATIONS SHOWN ARE BASED UPON USCGS, NATIONAL GEODETIC VERTICAL DATUM OF 1929 AND WERE INITIATED AT BENCHMARK #11000, A MASSACHUSETTS GEODETIC SURVEY DISC.

4) THE LOCUS PROPERTY LIES WITHIN ZONE C, AREA OF MINIMAL FLOODING, AS SHOWN ON THE FLOOD INSURANCE RATE MAP FOR THE CITY SOMERVILLE, MASSACHUSETTS COMMUNITY PANEL NUMBER 250214 0001B AND COMMUNITY PANEL NUMBER 250214 0002B EFFECTIVE EFFECTIVE DATE JULY 17,1986.

5) THE SITE LIES IN ZONING DISTRICTS ASMD AND WOD ZONE LINES OVERLAY DISTRICT. AS SHOWN WERE DETERMINED FROM INFORMATION OBTAINED FROM THE CITY OF SOMERVILLE PLANNING DEPARTMENT AND FROM THE ZONING MAP OF SOMERVILLE, MASSACHUSETTS, DATED (REVISED) MARCH 1, 2004. DIMENSIONAL REQUIREMENTS AT THE TIME OF THE SURVEY FOR THE ZONING DISTRICT SHOWN ARE:

ASMD	REQUIRED
MINIMUM LOT SIZE	5,000 S.F.
MAXIMUM F.A.R.	1.0
TOTAL OPEN SPACE	25%
USABLE OPEN SPACE	10%
MAXIMUM BUILDING HEIGHT*	40 FEET
FRONT YARD SETBACK	NO MINIMUM
SIDE YARD SETBACK	NO MINIMUM
REAR YARD SETBACK	NO MINIMUM
•BUILDING WITHIN 150' OF MYSTIC RIVER BANK	30 FEET
•BUILDING WITHIN 150'-250' OF MYSTIC RIVER BANK	40 FEET
•BUILDING WITHIN 250'-350' OF MYSTIC RIVER BANK	40 FEET
•WITHIN 1,000' OF MBTA ENTRANCE	40 FEET

*•PARK BUILDING ONLY

PUD-A	REQUIRED
MINIMUM LOT SIZE	20,000 S.F.
MAXIMUM F.A.R.	10
TOTAL OPEN SPACE	25%
USABLE OPEN SPACE	12.5%
MAXIMUM BUILDING HEIGHT*	125 FEET
FRONT YARD SETBACK	NO MINIMUM
SIDE YARD SETBACK	NO MINIMUM
REAR YARD SETBACK	NO MINIMUM
•BUILDING WITHIN 150' OF MYSTIC RIVER BANK	NOT PERMITTED
•BUILDING WITHIN 150'-250' OF MYSTIC RIVER BANK	70 FEET
•BUILDING WITHIN 250'-350' OF MYSTIC RIVER BANK	90 FEET
•WITHIN 1,000' OF MBTA ENTRANCE	250 FEET

No.	Revision	Date	Apprvd.
3	Wetlands & General Notes	July 2007	
2	Easement & Property	OCT 2006	
1	DRAINAGE UPDATE	MAY 2006	

Designed by | Drawn by | Checked by
CAD checked by | Approved by
Scale 1"=50' | Date February 1, 2006

Project Title
Assembly Square

Somerville, Massachusetts
Issued for

Drawing Title
Existing Conditions
Plan of Land

COMMONWEALTH OF MASSACHUSETTS
RUSSELL J. BOUSQUET
NO. 35989
PROFESSIONAL LAND SURVEYOR

7/1/07

Drawing Number
Sv-4

4 5

08518

\\Mawald\d\08518\cad\sr\planset\08518_AE.dwg

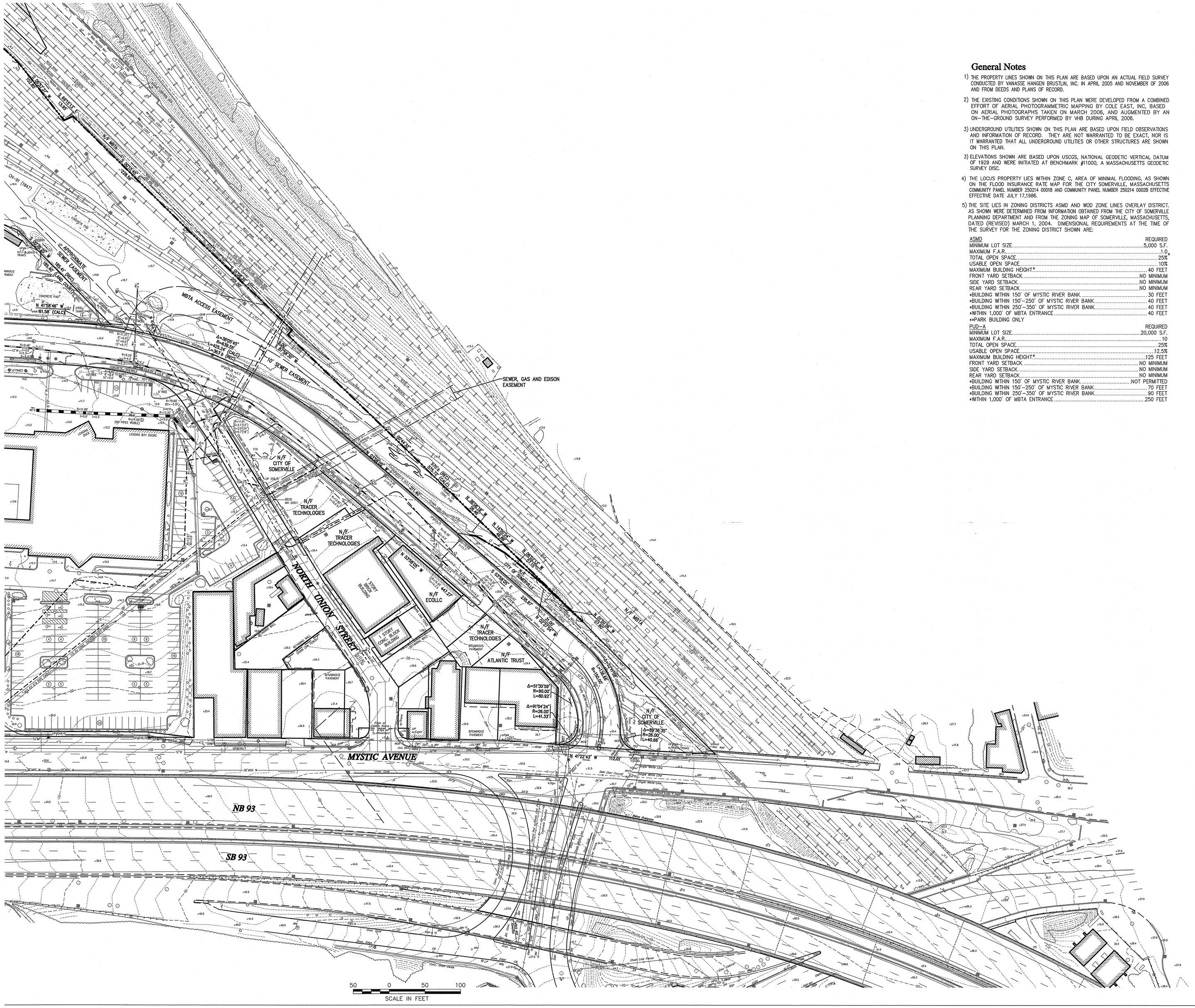

General Notes

1) THE PROPERTY LINES SHOWN ON THIS PLAN ARE BASED UPON AN ACTUAL FIELD SURVEY CONDUCTED BY VANASSE HANGEN BRUSTLIN, INC. IN APRIL 2005 AND NOVEMBER OF 2006 AND FROM DEEDS AND PLANS OF RECORD.

2) THE EXISTING CONDITIONS SHOWN ON THIS PLAN WERE DEVELOPED FROM A COMBINED EFFORT OF AERIAL PHOTOGRAMMETRIC MAPPING BY COLE EAST, INC, BASED ON AERIAL PHOTOGRAPHS TAKEN ON MARCH 2006, AND AUGMENTED BY AN ON-THE-GROUND SURVEY PERFORMED BY VHB DURING APRIL 2006.

3) UNDERGROUND UTILITIES SHOWN ON THIS PLAN ARE BASED UPON FIELD OBSERVATIONS AND INFORMATION OF RECORD. THEY ARE NOT WARRANTED TO BE EXACT, NOR IS IT WARRANTED THAT ALL UNDERGROUND UTILITIES OR OTHER STRUCTURES ARE SHOWN ON THIS PLAN.

3) ELEVATIONS SHOWN ARE BASED UPON USCGS, NATIONAL GEODETIC VERTICAL DATUM OF 1929 AND WERE INITIATED AT BENCHMARK #11000, A MASSACHUSETTS GEODETIC SURVEY DISC.

4) THE LOCUS PROPERTY LIES WITHIN ZONE C, AREA OF MINIMAL FLOODING, AS SHOWN ON THE FLOOD INSURANCE RATE MAP FOR THE CITY SOMERVILLE, MASSACHUSETTS COMMUNITY PANEL NUMBER 250214 0001B AND COMMUNITY PANEL NUMBER 250214 0002B EFFECTIVE EFFECTIVE DATE JULY 17,1986.

5) THE SITE LIES IN ZONING DISTRICTS ASMD AND WOD ZONE LINES OVERLAY DISTRICT. AS SHOWN WERE DETERMINED FROM INFORMATION OBTAINED FROM THE CITY OF SOMERVILLE PLANNING DEPARTMENT AND FROM THE ZONING MAP OF SOMERVILLE, MASSACHUSETTS, DATED (REVISED) MARCH 1, 2004. DIMENSIONAL REQUIREMENTS AT THE TIME OF THE SURVEY FOR THE ZONING DISTRICT SHOWN ARE:

ASMD	REQUIRED
MINIMUM LOT SIZE	5,000 S.F.
MAXIMUM F.A.R.	1.0
TOTAL OPEN SPACE	25%
USABLE OPEN SPACE	10%
MAXIMUM BUILDING HEIGHT*	40 FEET
FRONT YARD SETBACK	NO MINIMUM
SIDE YARD SETBACK	NO MINIMUM
REAR YARD SETBACK	NO MINIMUM
*BUILDING WITHIN 150' OF MYSTIC RIVER BANK	30 FEET
*BUILDING WITHIN 150'-250' OF MYSTIC RIVER BANK	40 FEET
*BUILDING WITHIN 250'-350' OF MYSTIC RIVER BANK	40 FEET
*WITHIN 1,000' OF MBTA ENTRANCE	40 FEET

**PARK BUILDING ONLY

PUD-A	REQUIRED
MINIMUM LOT SIZE	20,000 S.F.
MAXIMUM F.A.R.	10
TOTAL OPEN SPACE	25%
USABLE OPEN SPACE	12.5%
MAXIMUM BUILDING HEIGHT*	125 FEET
FRONT YARD SETBACK	NO MINIMUM
SIDE YARD SETBACK	NO MINIMUM
REAR YARD SETBACK	NO MINIMUM
*BUILDING WITHIN 150' OF MYSTIC RIVER BANK	NOT PERMITTED
*BUILDING WITHIN 150'-250' OF MYSTIC RIVER BANK	70 FEET
*BUILDING WITHIN 250'-350' OF MYSTIC RIVER BANK	90 FEET
*WITHIN 1,000' OF MBTA ENTRANCE	250 FEET

VHB
Vanasse Hangen Brustlin, Inc.
Transportation
Land Development
Environmental Services
101 Walnut Street, P.O. Box 9151
Watertown, Massachusetts 02471-9151
617 924 1770 • FAX 617 924 2286

N
MASS GRID

Legend

- DRAIN MANHOLE
- CATCH BASIN
- SEWER MANHOLE
- ELECTRIC MANHOLE
- TELEPHONE MANHOLE
- MANHOLE
- HANDHOLE
- WATER GATE
- FIRE HYDRANT
- GAS GATE
- STREET SIGN
- LIGHT POLE
- UTILITY POLE
- GUY WIRE
- GUY POLE
- FFE=32.18' FIRST FLOOR ELEVATION
- MW MONITORING WELL
- EOP EDGE OF PAVEMENT
- CC CONCRETE CURB
- VGC VERTICAL GRANITE CURB
- SGE SLOPED GRANITE EDGE
- BB BITUMINOUS BERM
- GUARD RAIL
- CHAIN LINK FENCE
- DRAINAGE LINE
- SEWER LINE
- OHW OVERHEAD WIRE
- E UNDERGROUND ELECTRIC
- T TELEPHONE LINE
- G GAS LINE
- W WATER LINE
- STONEWALL
- TREELINE
- 100'BZ 100-FT BUFFER ZONE
- 100'RA 100-FT RIVERFRONT AREA
- 200'RA 200-FT RIVERFRONT AREA
- AF1=100 LIMIT MEAN ANNUAL HIGH WATER
- BF1=100 LIMIT OF BANK
- WF1=100 VEGETATED WETLAND BOUNDARY

No.	Revision	Date	Apprvd.
3	Wetlands & General Notes	July 2007	
2	Easement & Property	OCT 2006	
1	DRAINAGE UPDATE	MAY 2006	

Designed by	Drawn by	Checked by
CAD checked by	Approved by	
Scale 1"=50'	Date February 1, 2006	

Project Title
Assembly Square

Somerville, Massachusetts
Issued for

Drawing Title
Existing Conditions
Plan of Land

Drawing Number
Sv-5

COMMONWEALTH OF MASSACHUSETTS
RUSSELL J. BOUSQUET
NO. 35389
PROFESSIONAL LAND SURVEYOR
7/19/07

5 5

08518

\\Mawald\d\08518\cad\sr\planset\08518_AE.dwg