SHEET NUMBER	SHEET NAME	ISSUE DATE
A-000	COVER SHEET	11/24/2009
CIVIL DRAWING LIST		
C0	SUBDIVISION PLAN	1/29/2010
C1	PERMIT LAYOUT AND GRADING PLAN	11/24/2009
C2	PERMIT UTILITY PLAN	11/24/2009
C3	DETAILS SHEET	11/24/2009
C4	DETAILS SHEET	11/24/2009
L1	LANDSCAPE PLAN	11/24/2009

Architectural Drawing List		
Sheet Number	Sheet Name	Sheet Issue Date
A-001	General Notes & Abreviations	08/24/2009
A-100	Garage Floor Plan	08/24/2009
A-101	1st Floor Plan	08/24/2009
A-102	2nd Floor Plan	08/24/2009
A-103	3rd Floor Plan	08/24/2009
A-104	4th Level Plan	08/24/2009
A-105	Roof Plan	11/19/09
A-300	Elevations	08/24/2009
A-301	South & East Elevations	08/24/2009
A-302	Dilboy Post Plans & Elevations	11/24/09
A-303	Summer Street Elevation	02/05/10

PROJECT:
SUMMER STREET RESIDENCES & DILBOY POST

PROJECT ADDRESS:
351 SUMMER STREET
SOMERVILLE MASSACHUSETTS

CLIENT
Strategic Capital Group,LLC.

ARCHITECT
KHALSA DESIGN INC.
ADDRESS:
17 IVALOO STREET, SUITE 400
SOMERVILLE, MA 02143

STRUCTURAL
VEITAS & VEITAS
ADDRESS:
639 GRANITE STREET, SUITE 101
BRAINTREE MA 02184

CIVIL
DESIGN CONSULTANTS, INC. (DCI)
265 Medford Street
Somerville, MA 02143

LANDSCAPE
William Fleming Associates, Inc.
Landscape Architecture & Planning
5 Central Square Suite 301
Stoneham, MA 02180

PERMIT SET
02-05-10

PROJECT NAME
Summer Street Residences & Dilboy Post Building

PROJECT ADDRESS
351 Summer Street
Somerville MA 02143

CLIENT
Strategic Capital Group,LLC.

ARCHITECT
KHALSA DESIGN INC.

17 IVALOO STREET SUITE 400
SOMERVILLE, MA 02143
TELEPHONE: 617-591-8682 FAX: 617-591-2086

CONSULTANTS:

REGISTRATION

Project number	07042
Date	02-04-2010
Drawn by	KK-SA
Checked by	JSK
Scale	

REVISIONS

No.	Description	Date

Cover Sheet

A-000

Summer Street Residences & Dilboy Post Building

G:\07\07017-Dakota-Summer-St\ARCH\07017_SUMMER ST_02-02-2010.rvt

2/5/2010 12:07:22 PM

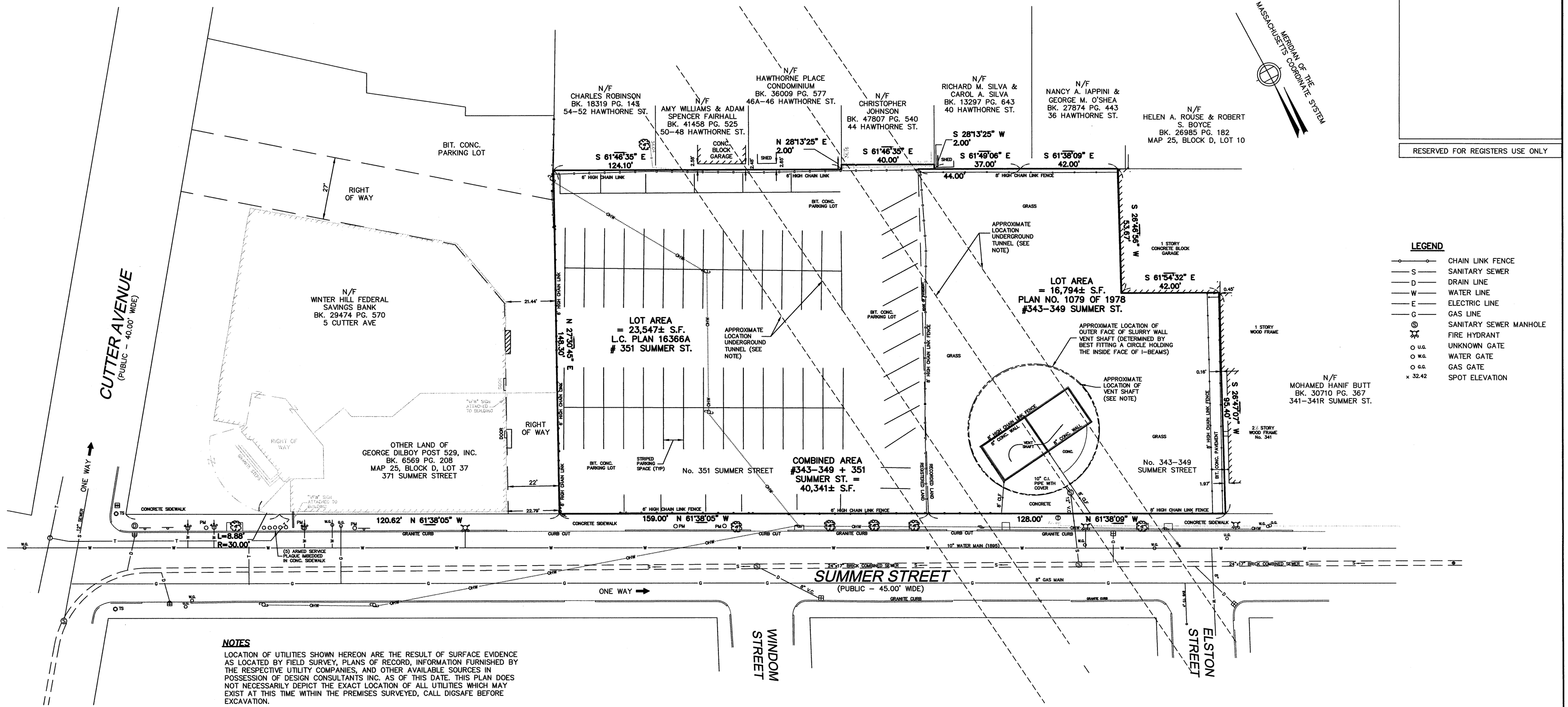

RESERVED FOR REGISTERS USE ONLY

LEGEND

- CHAIN LINK FENCE
- S — SANITARY SEWER
- D — DRAIN LINE
- W — WATER LINE
- E — ELECTRIC LINE
- G — GAS LINE
- (S) SANITARY SEWER MANHOLE
- FIRE HYDRANT
- U.G. UNKNOWN GATE
- W.G. WATER GATE
- G.G. GAS GATE
- × 32.42 SPOT ELEVATION

NOTES

LOCATION OF UTILITIES SHOWN HEREON ARE THE RESULT OF SURFACE EVIDENCE AS LOCATED BY FIELD SURVEY, PLANS OF RECORD, INFORMATION FURNISHED BY THE RESPECTIVE UTILITY COMPANIES, AND OTHER AVAILABLE SOURCES IN POSSESSION OF DESIGN CONSULTANTS INC. AS OF THIS DATE. THIS PLAN DOES NOT NECESSARILY DEPICT THE EXACT LOCATION OF ALL UTILITIES WHICH MAY EXIST AT THIS TIME WITHIN THE PREMISES SURVEYED, CALL DIGSAFE BEFORE EXCAVATION.

THE PURPOSE OF THIS PLAN IS TO COMBINE PARCELS S107A, S108A, AND S109A AS SHOWN ON PLAN NO. 1079 OF 1978 WITH THE ABUTTING PARCEL OF REGISTERED LAND AS SHOWN ON LAND COURT PLAN 16366A INTO ONE CONTIGUOS LOT OF LAND HAVING AN AREA OF 40,341 ± S.F..

APPROXIMATE LOCATION OF VENT SHAFT AND UNDERGROUND TUNNELS WERE SCALED FROM A PLAN ENTITLED "SUMMER STREET VENT SHAFT LOCATION PLAN AND GENERAL SECTIONS" BY BECHTEL INCORPORATED, DATED SEPT. 29, 1978

OWNERSHIP INFORMATION USED IN THE PREPARATION OF THIS PLAN WAS OBTAINED FROM THE CITY OF SOMERVILLE ASSESSOR'S OFFICE.

I CERTIFY THAT THIS PLAN CONFORMS TO THE RULES AND REGULATIONS OF THE REGISTERS OF DEEDS.

COMMONWEALTH OF MASSACHUSETTS
MICHAEL D. BOVIO
No. 34609
PROFESSIONAL LAND SURVEYOR

P.L.S. _____
MICHAEL D. BOVIO, P.L.S. MASS. REGISTRATION NO. 34609

DATE 2/05/10

LOCUS TITLE INFORMATION

351 SUMMER STREET

OWNER:	GEORGE DILBOY POST 529, INC.
DEED REFERENCE:	BK. 389 PG. 225
PLAN REFERENCE:	L.C.C. 16366A
ASSESSORS:	MAP 25, BLOCK D, LOT 36

LOCUS TITLE INFORMATION

343-349 SUMMER STREET

OWNER:	THE DAKOTA PARTNERS LLC
DEED REFERENCE:	BK. 37414 PG. 63
PLAN REFERENCE:	PLAN NO. 1079 OF 1978
ASSESSORS:	MAP 25, BLOCK D, LOTS 33, 34 & 35

20 0 20 40 60 80 FEET
10 0 10 20 METERS

CITY OF SOMERVILLE, MASSACHUSETTS
PLANNING BOARD SUBDIVISION APPROVAL

_____
_____
_____
_____
_____

DATE, _____

Copyright 2009 Design Consultants, Inc.

P:\2008 Projects\2008-038 351 Summer St Somerville\dwg_SURVEYING\08-038ex.dwg

Design Consultants, Inc.
Consulting Engineers and Surveyors
DESIGN CONSULTANTS BUILDING
265 MEDFORD STREET
SOMERVILLE, MA 02143
(617) 776-3350

SCALE:
HORIZ: 1"= 20'
VERT: _____

NO.	DATE	BY	REVISIONS

FIELD: SG
CALCS: ML
CHECKED: MDB
APPROVED: MDB

SUBDIVISION PLAN

341-371 SUMMER STREET

PLAN OF LAND IN
SOMERVILLE MASSACHUSETTS
SURVEYED FOR
DAKOTA PARTNERS LLC

PROJECT NO. 2008-038
DATE: JAN. 29, 2010
SHEET NO.
1 OF 1

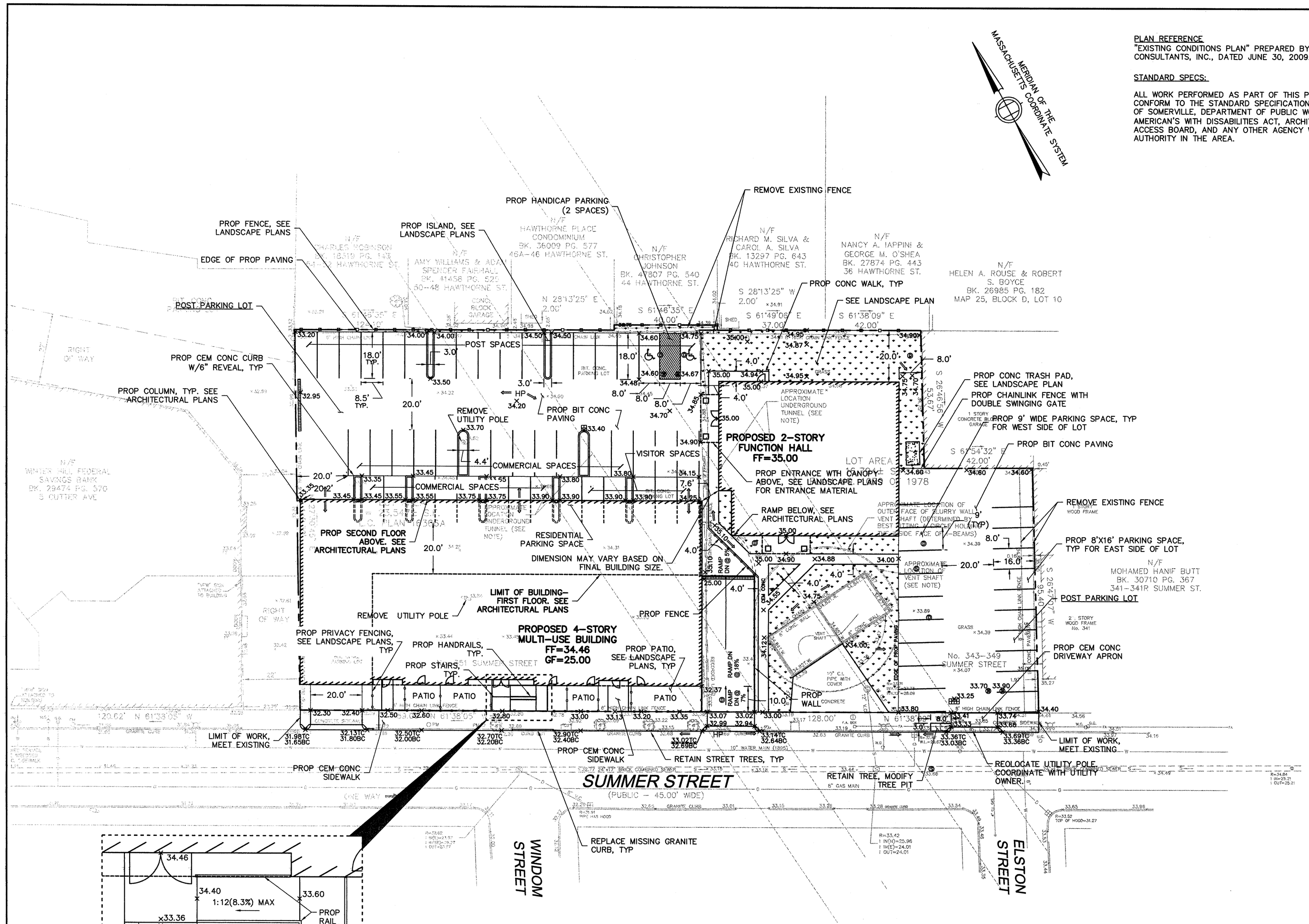

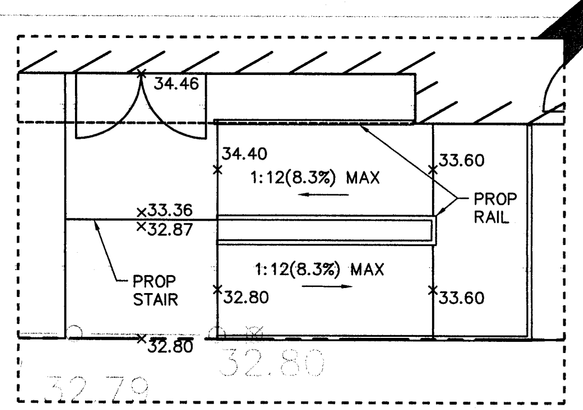

RAMP GRADING
SCALE: 1"=5'

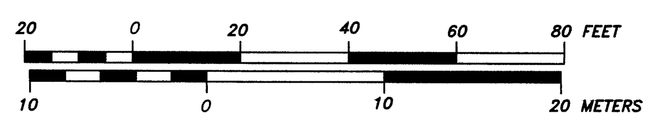

PLAN REFERENCE
"EXISTING CONDITIONS PLAN" PREPARED BY DESIGN CONSULTANTS, INC., DATED JUNE 30, 2009.

STANDARD SPECS:

ALL WORK PERFORMED AS PART OF THIS PROJECT SHALL CONFORM TO THE STANDARD SPECIFICATIONS OF THE CITY OF SOMERVILLE, DEPARTMENT OF PUBLIC WORKS, THE AMERICAN'S WITH DISSABILITIES ACT, ARCHITECTURAL ACCESS BOARD, AND ANY OTHER AGENCY WITH AUTHORITY IN THE AREA.

GENERAL NOTES

1. THIS PLAN DOES NOT NECESSARILY DEPICT THE EXACT LOCATION AND SIZE OF ALL UTILITIES WHICH MAY EXIST AT THIS TIME INSIDE OR OUTSIDE OF EXISTING OR PROPOSED BUILDINGS, ON THE SUBJECT PROPERTY, WITHIN THE STREET RIGHT-OF-WAY, OR ON ABUTTING LOTS.
2. THE ADJACENT ABUTTER(S) MUST BE NOTIFIED PRIOR TO THE CONSTRUCTION LOCATED ON THEIR PROPERTY.
3. ALL EXISTING STRUCTURES ON THE SUBJECT PROPERTY SHALL BE DEMOLISHED, IF THERE ARE ANY. UTILITY POLES ARE TO BE REMOVED & RELOCATED BY OTHERS, UNLESS OTHERWISE DIRECTED BY OWNER.
4. ALL EXISTING UNDERGROUND UTILITIES SHALL BE ABANDONED, IF THERE ARE ANY, IN THEIR ENTIRETY, UP TO THE PROPERTY LINE, AND TO THE SPECIFICATIONS OF THE CITY OF SOMERVILLE. ABANDONMENT OF EXISTING CONNECTIONS SHALL BE COORDINATED BY THE CONTRACTOR WITH THE RESPECTIVE OWNERS.
5. CUTTING AND CAPPING AT THE PROPERTY LINE FOR SAID UTILITIES AND REMOVAL/ABANDONMENT/CAPPING BEYOND THE PROPERTY LINE SHALL BE AS PER INSTRUCTED BY THE RESPECTIVE UTILITY COMPANY.
6. THE CONTRACTOR IS RESPONSIBLE FOR VERIFYING AND RECORDING THE EXACT LOCATION OF EACH PROPOSED UTILITY CONNECTION.
7. CONTRACTOR SHALL ADJUST ALL GATES, SERVICE BOXES, ETC. WITHIN THE RECONSTRUCTION OF THE SIDEWALK AREA.
8. THE CITY OF SOMERVILLE MUNICIPAL UTILITIES (WATER, SEWER, & DRAIN) ARE NOT PART OF DIG-SAFE. CONTACT THE CITY OF SOMERVILLE FOR THE MARKING OF SOMERVILLE MUNICIPAL UTILITIES, CONTACT DIG-SAFE AT 1-888-344-7233 OR 1-800-322-4844 AT LEAST 72 HOURS PRIOR TO EXCAVATION.
9. THE CONTRACTOR SHALL SUPPLY ALL PIPING, STRUCTURES, MATERIALS, AND APPURTENANCES, AND SHALL PERFORM ALL WET AND/OR DRY TAPS, AS PART OF HIS CONTRACT.
10. NEW WATER SERVICES MUST BE LEFT SHUT OFF AT THE MAIN ON THE STREET UNTIL ACTIVATED BY THE CITY OF SOMERVILLE.
11. A DYE TEST SHALL BE PERFORMED BY A CITY OF SOMERVILLE INSPECTOR PRIOR TO THE ISSUANCE OF AN OCCUPANCY PERMIT.
12. THIS PLAN HAS BEEN PREPARED FOR THE APPROVAL OF THE DOMESTIC WATER SERVICE, FIRE PROTECTION WATER SERVICE, THE ON-SITE DRAINAGE FACILITIES AND THE SEWER SERVICE.
13. THE RESPONSIBILITY OF OWNERSHIP AND MAINTENANCE OF THE SEWER, WATER, AND DRAIN CONNECTIONS ON PRIVATE PROPERTY AND/OR PRIVATE AND PUBLIC WAYS SHALL REMAIN THAT OF THE OWNER.
14. THE CITY OF SOMERVILLE RESERVES THE RIGHT TO INSPECT ALL PRIVATE FACILITIES DISCHARGING TO MUNICIPAL FACILITIES.
15. DURING EXCAVATION AND CONSTRUCTION OF PIPES AND STRUCTURES, TRENCHES MUST BE ADEQUATELY BRACED AND PROTECTED AGAINST CAVE-IN.
16. ALL ROOF DRAINS WILL BE ROUTED THROUGH THE GARAGE, AND WILL LEAVE THE BUILDING AT THE POINT INDICATED ON THE PLAN (TO BE DESIGNATED BY OTHERS).
17. THE PROPOSED DESIGN MUST MEET THE APPROVAL OF THE MASSACHUSETTS BAY TRANSPORTATION AUTHORITY. THE OWNER IS RESPONSIBLE FOR OBTAINING THIS APPROVAL.
18. THE STRUCTURAL INTEGRITY OF THE MBTA'S VENT SHAFT IS TO BE REVIEWED BY A GEOTECHNICAL ENGINEER AND A STRUCTURAL ENGINEER FOR ADDITIONAL HYDROSTATIC PRESSURE AGAINST ALL STRUCTURES DUE TO THE PROPOSED SUBSURFACE INFILTRATION SYSTEM. THIS REVIEW BY A LICENSED PROFESSIONAL STRUCTURAL AND GEOTECHNICAL ENGINEER IS THE RESPONSIBILITY OF THE OWNER.
19. SEE LANDSCAPE PLANS FOR TREATMENT AND GRADING OF LANDSCAPE AREAS.

LEGEND

⊡	BOUND FOUND	Ⓣ	TELEPHONE MANHOLE
—o—o—	CHAIN LINK FENCE	Ⓜ	MANHOLE – UNKNOWN TYPE
—o—o—	STOCKADE FENCE	C.B.	CATCH BASIN
—S—	SANITARY SEWER	L.P.	LIGHT POLE
—D—	DRAIN LINE	U.P.	UTILITY POLE
—W—	WATER LINE	HYD.	FIRE HYDRANT
—G—	GAS LINE	W.G.	WATER GATE
—OHW—	OVERHEAD WIRES	G.G.	GAS GATE
—E—	ELECTRIC LINE	GATE	GATE – UNKNOWN TYPE
—T—	TELEPHONE LINE	C.O.	CLEANOUT
—CATV—	CABLE TELEVISION LINE	PD	PLANTER DRAIN
—FA—	FIRE ALARM CABLE	F.A.	FIRE ALARM BOX
—OHW—	OVERHEAD WIRES		SIGN
Ⓢ	SANITARY MANHOLE	T.W.	TOP OF WALL
Ⓓ	DRAIN MANHOLE	× 33.35	PROPOSED GRADE
HP	HIGH POINT	× 33.35	HOLD EXISTING GRADE
⟹	DIRECTION OF FLOW		

Copyright 2010 Design Consultants, Inc.

P:\2008 projects\2008-038 351 Summer St Somerville\dwg_ENGINEERING\08-038 SP.dwg

Design Consultants, Inc.
Consulting Engineers and Surveyors
DESIGN CONSULTANTS BUILDING
265 MEDFORD STREET
SOMERVILLE, MA 02143
(617) 776-3350

SCALE:
HORIZ: 1"= 20'
VERT: ____

NO.	DATE	BY	REVISIONS
1	2/5/10	RB	DRIVEWAY, PARKING, FENCES

COMMONWEALTH OF MASSACHUSETTS 39844 DAVID GIANGRANDE REGISTERED PROFESSIONAL ENGINEER

DESIGNED: RB
DRAFTED: RB
CHECKED: DG
APPROVED: DG

PERMIT LAYOUT AND GRADING PLAN

343-351 SUMMER STREET

PLAN OF LAND IN
SOMERVILLE, MASSACHUSETTS
PREPARED FOR
STRATEGIC CAPITAL GROUP, LLC

PROJECT NO. 2008-038
DATE: NOV. 3, 2009
SHEET NO. 1 OF 4

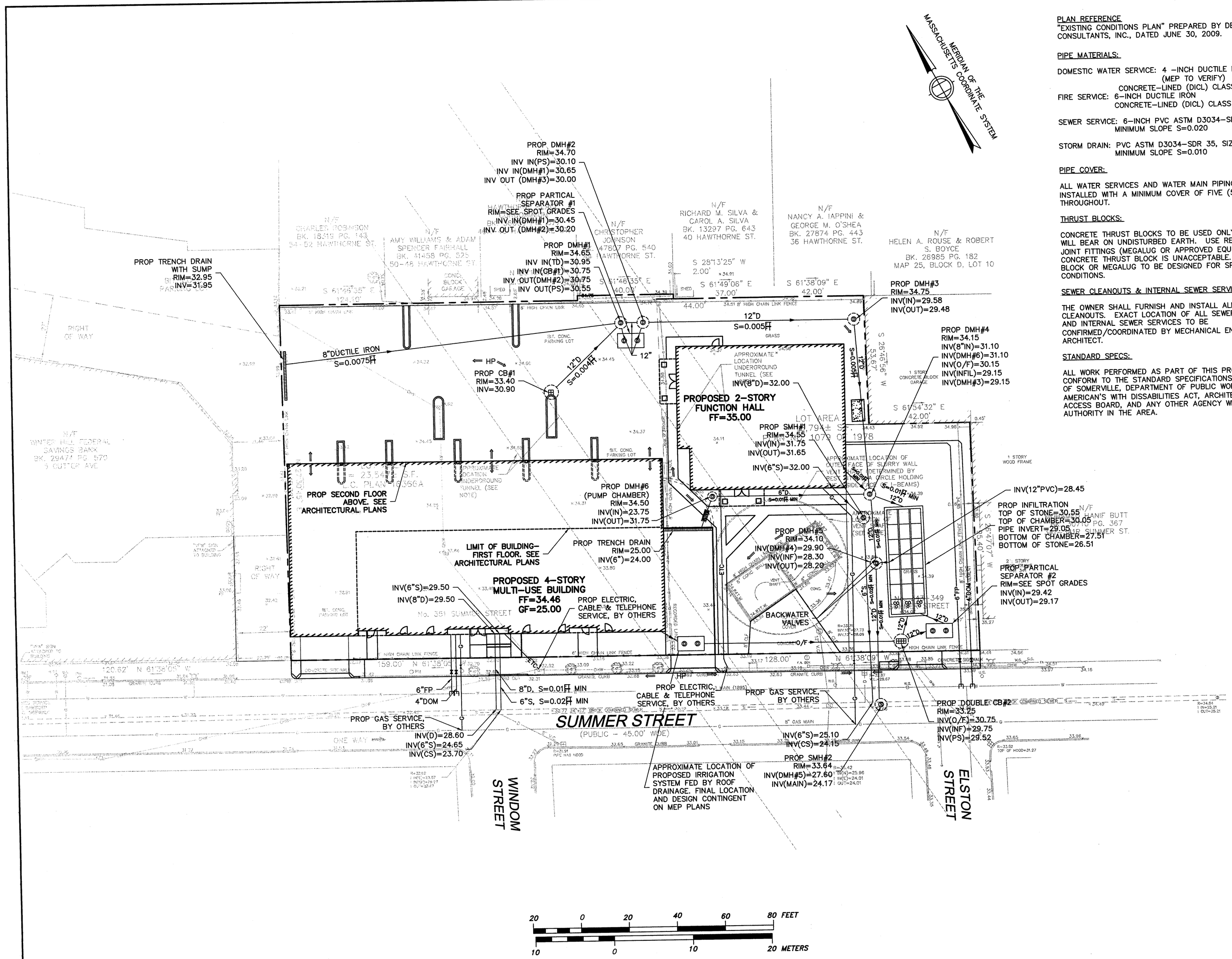

PLAN REFERENCE
"EXISTING CONDITIONS PLAN" PREPARED BY DESIGN CONSULTANTS, INC., DATED JUNE 30, 2009.

PIPE MATERIALS:

DOMESTIC WATER SERVICE: 4 -INCH DUCTILE IRON (MEP TO VERIFY) CONCRETE-LINED (DICL) CLASS 52
FIRE SERVICE: 6-INCH DUCTILE IRON CONCRETE-LINED (DICL) CLASS 52

SEWER SERVICE: 6-INCH PVC ASTM D3034-SDR 35 MINIMUM SLOPE S=0.020

STORM DRAIN: PVC ASTM D3034-SDR 35, SIZE AS NOTED MINIMUM SLOPE S=0.010

PIPE COVER:

ALL WATER SERVICES AND WATER MAIN PIPING SHALL BE INSTALLED WITH A MINIMUM COVER OF FIVE (5) FEET THROUGHOUT.

THRUST BLOCKS:

CONCRETE THRUST BLOCKS TO BE USED ONLY WHERE IT WILL BEAR ON UNDISTURBED EARTH. USE RESTRAINED JOINT FITTINGS (MEGALUG OR APPROVED EQUAL) WHERE CONCRETE THRUST BLOCK IS UNACCEPTABLE. SIZE OF BLOCK OR MEGALUG TO BE DESIGNED FOR SPECIFIC CONDITIONS.

SEWER CLEANOUTS & INTERNAL SEWER SERVICES:

THE OWNER SHALL FURNISH AND INSTALL ALL SEWER CLEANOUTS. EXACT LOCATION OF ALL SEWER CLEANOUTS AND INTERNAL SEWER SERVICES TO BE CONFIRMED/COORDINATED BY MECHANICAL ENGINEER AND ARCHITECT.

STANDARD SPECS:

ALL WORK PERFORMED AS PART OF THIS PROJECT SHALL CONFORM TO THE STANDARD SPECIFICATIONS OF THE CITY OF SOMERVILLE, DEPARTMENT OF PUBLIC WORKS, THE AMERICAN'S WITH DISSABILITIES ACT, ARCHITECTURAL ACCESS BOARD, AND ANY OTHER AGENCY WITH AUTHORITY IN THE AREA.

GENERAL NOTES

1. THIS PLAN DOES NOT NECESSARILY DEPICT THE EXACT LOCATION AND SIZE OF ALL UTILITIES WHICH MAY EXIST AT THIS TIME INSIDE OR OUTSIDE OF EXISTING OR PROPOSED BUILDINGS, ON THE SUBJECT PROPERTY, WITHIN THE STREET RIGHT-OF-WAY, OR ON ABUTTING LOTS.
2. THE ADJACENT ABUTTER(S) MUST BE NOTIFIED PRIOR TO THE CONSTRUCTION LOCATED ON THEIR PROPERTY.
3. ALL EXISTING STRUCTURES ON THE SUBJECT PROPERTY SHALL BE DEMOLISHED, IF THERE ARE ANY. UTILITY POLES ARE TO BE REMOVED & RELOCATED BY OTHERS, UNLESS OTHERWISE DIRECTED BY OWNER.
4. ALL EXISTING UNDERGROUND UTILITIES SHALL BE ABANDONED, IF THERE ARE ANY, IN THEIR ENTIRETY, UP TO THE PROPERTY LINE, AND TO THE SPECIFICATIONS OF THE CITY OF SOMERVILLE. ABANDONMENT OF EXISTING CONNECTIONS SHALL BE COORDINATED BY THE CONTRACTOR WITH THE RESPECTIVE OWNERS.
5. CUTTING AND CAPPING AT THE PROPERTY LINE FOR SAID UTILITIES AND REMOVAL/ABANDONMENT/CAPPING BEYOND THE PROPERTY LINE SHALL BE AS PER INSTRUCTED BY THE RESPECTIVE UTILITY COMPANY.
6. THE CONTRACTOR IS RESPONSIBLE FOR VERIFYING AND RECORDING THE EXACT LOCATION OF EACH PROPOSED UTILITY CONNECTION.
7. CONTRACTOR SHALL ADJUST ALL GATES, SERVICE BOXES, ETC. WITHIN THE RECONSTRUCTION OF THE SIDEWALK AREA.
8. THE CITY OF SOMERVILLE MUNICIPAL UTILITIES (WATER, SEWER, & DRAIN) ARE NOT PART OF DIG-SAFE. CONTACT THE CITY OF SOMERVILLE FOR THE MARKING OF SOMERVILLE MUNICIPAL UTILITIES, CONTACT DIG-SAFE AT 1-888-344-7233 OR 1-800-322-4844 AT LEAST 72 HOURS PRIOR TO EXCAVATION.
9. THE CONTRACTOR SHALL SUPPLY ALL PIPING, STRUCTURES, MATERIALS, AND APPURTENANCES, AND SHALL PERFORM ALL WET AND/OR DRY TAPS, AS PART OF HIS CONTRACT.
10. NEW WATER SERVICES MUST BE LEFT SHUT OFF AT THE MAIN ON THE STREET UNTIL ACTIVATED BY THE CITY OF SOMERVILLE.
11. A DYE TEST SHALL BE PERFORMED BY A CITY OF SOMERVILLE INSPECTOR PRIOR TO THE ISSUANCE OF AN OCCUPANCY PERMIT.
12. THIS PLAN HAS BEEN PREPARED FOR THE APPROVAL OF THE DOMESTIC WATER SERVICE, FIRE PROTECTION WATER SERVICE, THE ON-SITE DRAINAGE FACILITIES AND THE SEWER SERVICE.
13. THE RESPONSIBILITY OF OWNERSHIP AND MAINTENANCE OF THE SEWER, WATER, AND DRAIN CONNECTIONS ON PRIVATE PROPERTY AND/OR PRIVATE AND PUBLIC WAYS SHALL REMAIN THAT OF THE OWNER.
14. THE CITY OF SOMERVILLE RESERVES THE RIGHT TO INSPECT ALL PRIVATE FACILITIES DISCHARGING TO MUNICIPAL FACILITIES.
15. DURING EXCAVATION AND CONSTRUCTION OF PIPES AND STRUCTURES, TRENCHES MUST BE ADEQUATELY BRACED AND PROTECTED AGAINST CAVE-IN.
16. ALL ROOF DRAINS WILL BE ROUTED THROUGH THE GARAGE, AND WILL LEAVE THE BUILDING AT THE POINT INDICATED ON THE PLAN (TO BE DESIGNATED BY OTHERS).
17. THE PROPOSED DESIGN MUST MEET THE APPROVAL OF THE MASSACHUSETTS BAY TRANSPORTATION AUTHORITY. THE OWNER IS RESPONSIBLE FOR OBTAINING THIS APPROVAL.
18. THE STRUCTURAL INTEGRITY OF THE MBTA'S VENT SHAFT IS TO BE REVIEWED BY A GEOTECHNICAL ENGINEER AND A STRUCTURAL ENGINEER FOR ADDITIONAL HYDROSTATIC PRESSURE AGAINST ALL STRUCTURES DUE TO THE PROPOSED SUBSURFACE INFILTRATION SYSTEM. THIS REVIEW BY A LICENSED PROFESSIONAL STRUCTURAL AND GEOTECHNICAL ENGINEER IS THE RESPONSIBILITY OF THE OWNER.
19. SEE LANDSCAPE PLANS FOR TREATMENT AND GRADING OF LANDSCAPE AREAS.

LEGEND

	BOUND FOUND		TELEPHONE MANHOLE
—o—o—	CHAIN LINK FENCE		MANHOLE - UNKNOWN TYPE
—o—o—	STOCKADE FENCE		CATCH BASIN
—S—	SANITARY SEWER		LIGHT POLE
—D—	DRAIN LINE		UTILITY POLE
—W—	WATER LINE		FIRE HYDRANT
—G—	GAS LINE		WATER GATE
—OHW—	OVERHEAD WIRES		GAS GATE
—E—	ELECTRIC LINE		GATE - UNKNOWN TYPE
—T—	TELEPHONE LINE		CLEANOUT
—CATV—	CABLE TELEVISION LINE		PLANTER DRAIN
—FA—	FIRE ALARM CABLE		FIRE ALARM BOX
—OHW—	OVERHEAD WIRES		SIGN
	SANITARY MANHOLE	T.W.	TOP OF WALL
	DRAIN MANHOLE	× 33.35	PROPOSED GRADE
O/F	OVERFLOW	33.35	HOLD EXISTING GRADE
	DIRECTION OF FLOW	HP	HIGH POINT

P:\2008 projects\2008-038 351 Summer St Somerville\dwg_ENGINEERING\08-038 SP.dwg

Copyright 2009 Design Consultants, Inc.

Design Consultants, Inc.
Consulting Engineers and Surveyors
DESIGN CONSULTANTS BUILDING
265 MEDFORD STREET
SOMERVILLE, MA 02143
(617) 776-3350

SCALE:
HORIZ: 1"= 20'
VERT: _____

NO.	DATE	BY	
1	02/05/10	RB	IRRIGATION TANK
			REVISIONS

COMMONWEALTH OF MASSACHUSETTS 35844 DAVID GIANGRANDE REGISTERED PROFESSIONAL ENGINEER

DESIGNED: RB
DRAFTED: RB
CHECKED: DG
APPROVED: DG

PERMIT UTILITY PLAN

343-351 SUMMER STREET

PLAN OF LAND IN
SOMERVILLE, MASSACHUSETTS
PREPARED FOR
STRATEGIC CAPITAL GROUP, LLC

PROJECT NO. 2008-038
DATE: NOV. 3, 2009
SHEET NO. 2 OF 4

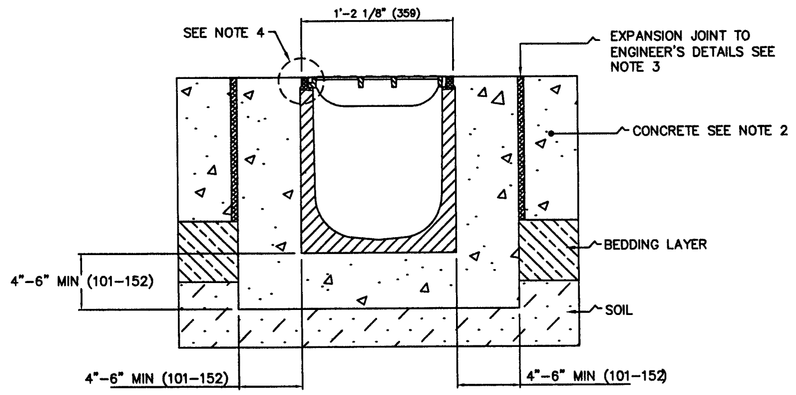

NOTES:
1. IT IS NECESSARY TO ENSURE THE MINIMUM DIMENSIONS SHOWN ARE SUITABLE FOR THE EXISTING GROUND CONDITIONS. ENGINEERING ADVICE MAY BE REQUIRED.
2. A MINIMUM CONCRETE STRENGTH OF 3000 PSI IS RECOMMENDED. THE CONCRETE SHOULD BE VIBRATED TO ELIMINATE AIR POCKETS.
3. EXPANSION AND CRACK CONTROL JOINTS ARE RECOMMENDED TO PROTECT THE CHANNEL AND THE CONCRETE SURROUND. ENGINEERING ADVICE MAY BE REQUIRED.
4. THE FINISHED LEVEL OF THE CONCRETE SURROUND MUST BE APPROX. 1/8" (3) ABOVE THE TOP OF THE CHANNEL EDGE.
5. REFER TO SMITH/ACO'S LATEST INSTALLATION INSTRUCTIONS FOR COMPLETE DETAILS.

TRENCH DRAIN

NOT TO SCALE

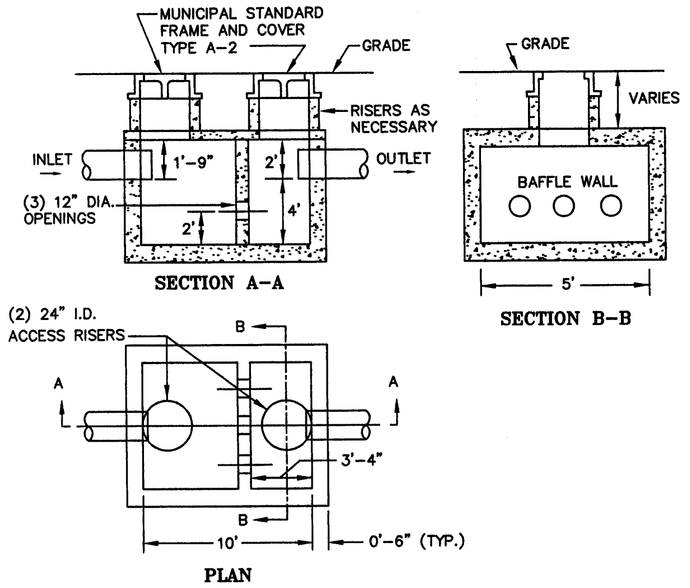

TYPICAL INLINE PARTICLE SEPARATOR
1,500 GALLON CAPACITY

NOT TO SCALE

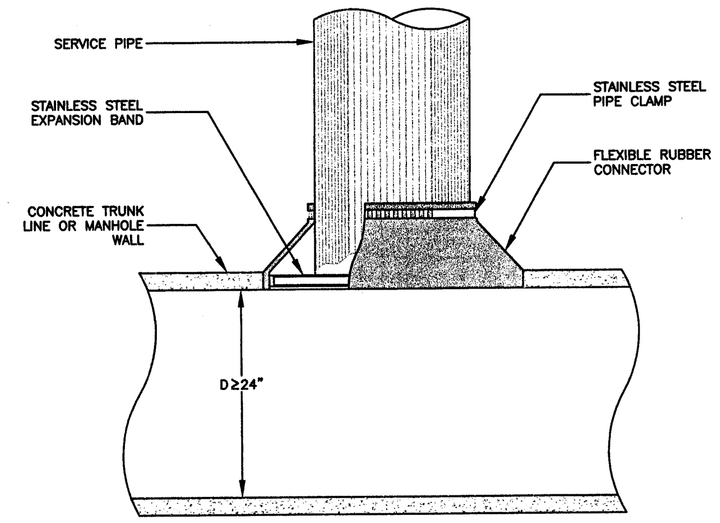

NOTES:

1. OPENING IN CONCRETE WALL SHALL BE CORED USING HIGH SPEED DIAMOND DRILL.
2. ALL METAL FIXTURES SHALL BE OF STAINLESS STEEL.
3. SERVICE LINE SHALL BE FLUSH WITH THE INSIDE OF THE CONCRETE PIPE OR WALL.
4. IF TRUNK LINE DIAMETER IS LESS THAN 24", THEN A SADDLE TYPE CONNECTION WILL BE USED.

TYPICAL FIELD CONNECTION TO LARGE
CONCRETE PIPE OR MANHOLE

NOT TO SCALE

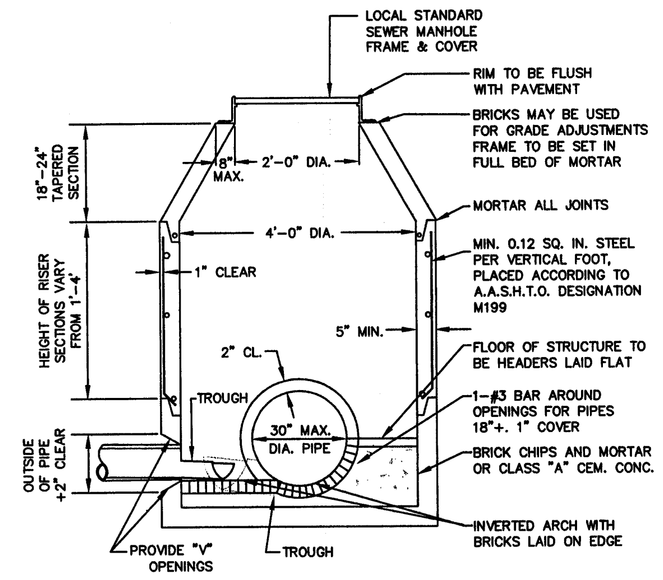

PRECAST CONCRETE SEWER MANHOLE

NOT TO SCALE

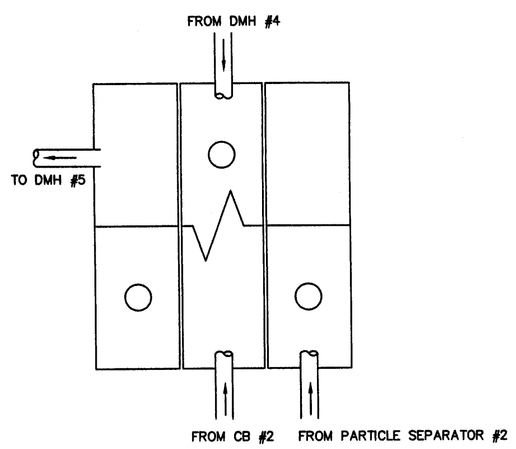

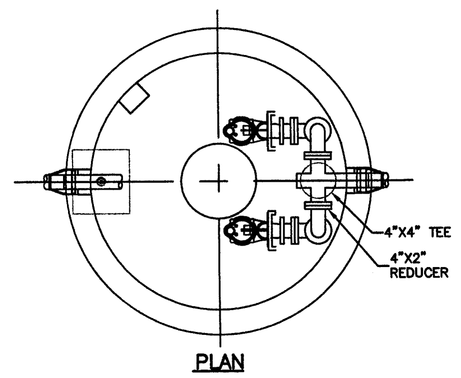

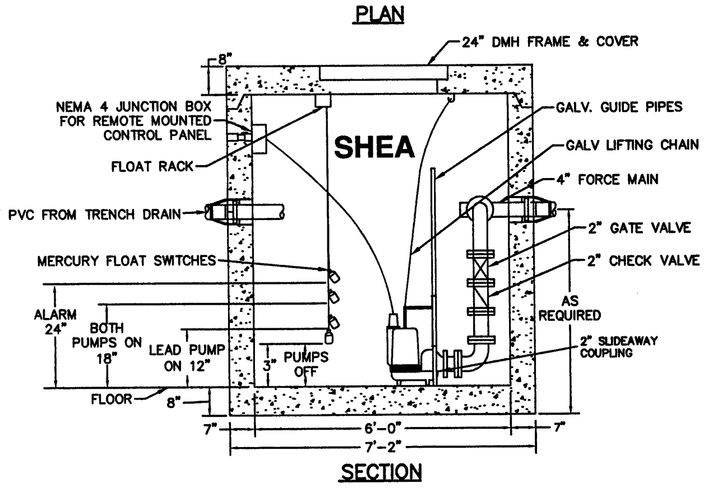

NOTES:

1. CONCRETE: 4,000 PSI MINIMUM AFTER 28 DAYS.
2. REINFORNCED STEEL CONFORMS TO LATEST ASTM A185
3. BUTYL RESIN SECTION JOINT CONFORMSTO LATEST ASTM C443 SPEC
4. SET CONTROLLER TO ALTERNATE LEAD PUMPS.
5. PUMPS SHALL BE 3/4 HP MINIMUM.

PUMP STATION DUPLEX PUMP PACKAGE

NOT TO SCALE

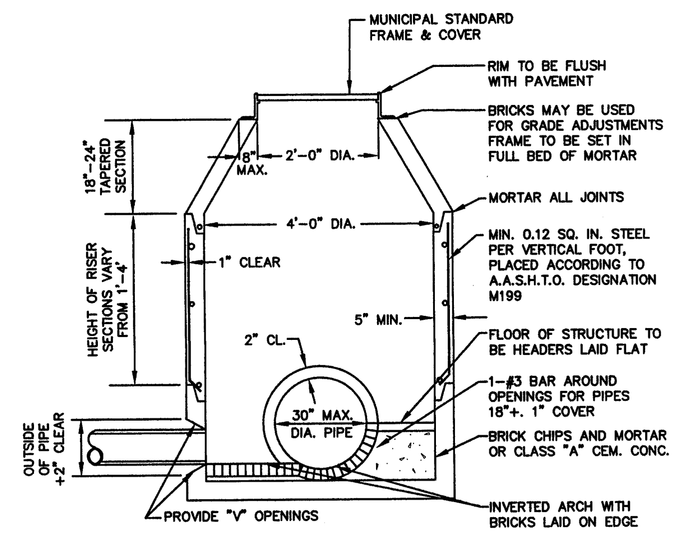

PRECAST CONCRETE DRAIN MANHOLE

NOT TO SCALE

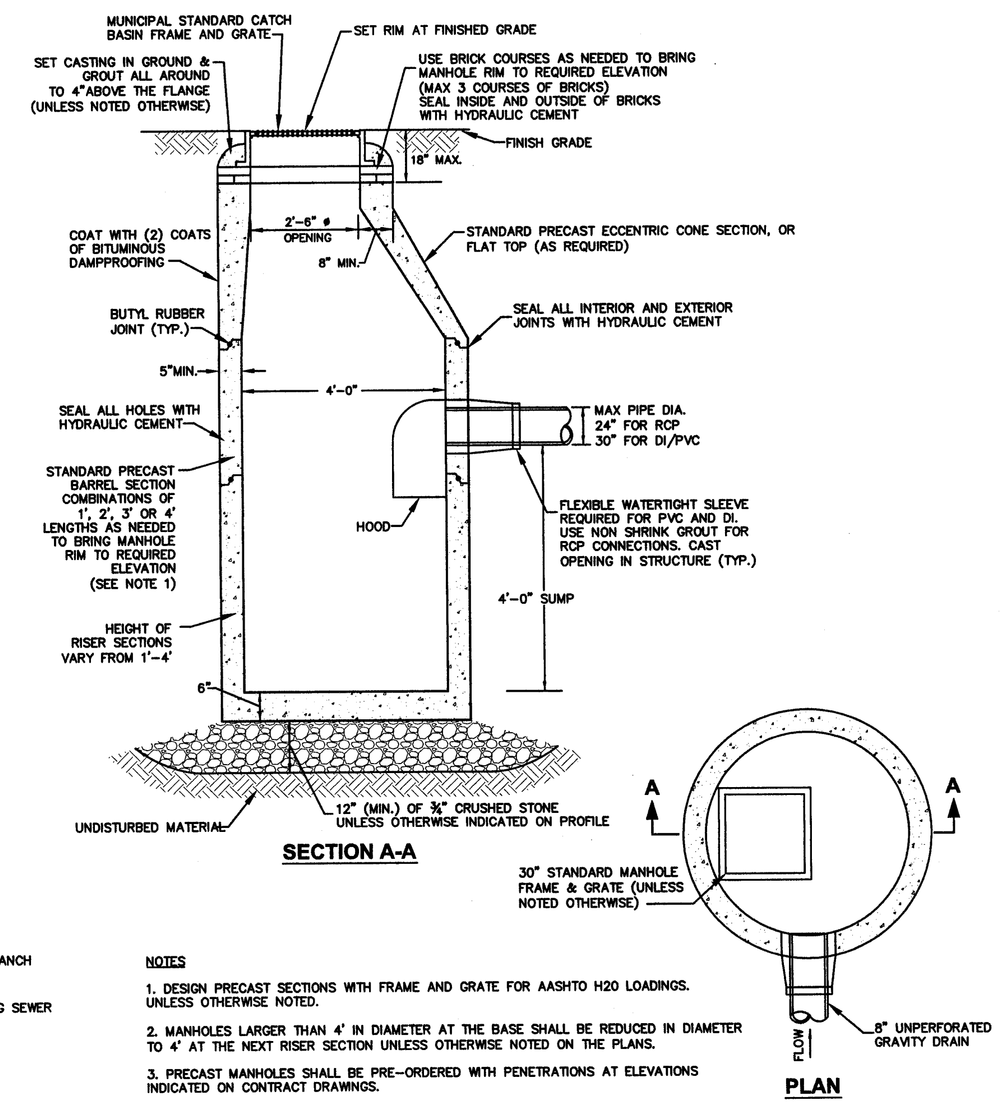

NOTES

1. DESIGN PRECAST SECTIONS WITH FRAME AND GRATE FOR AASHTO H20 LOADINGS. UNLESS OTHERWISE NOTED.
2. MANHOLES LARGER THAN 4' IN DIAMETER AT THE BASE SHALL BE REDUCED IN DIAMETER TO 4' AT THE NEXT RISER SECTION UNLESS OTHERWISE NOTED ON THE PLANS.
3. PRECAST MANHOLES SHALL BE PRE-ORDERED WITH PENETRATIONS AT ELEVATIONS INDICATED ON CONTRACT DRAWINGS.

MUNICIPAL STANDARD CATCH BASIN

NOT TO SCALE

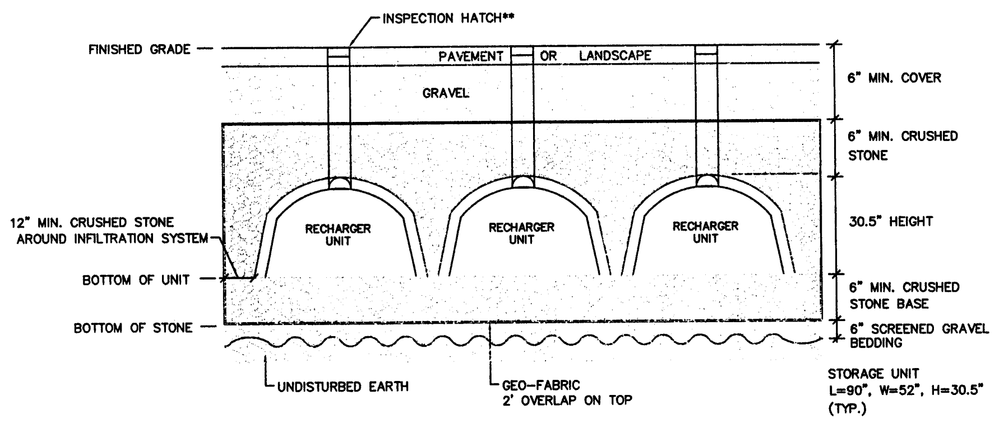

* ALL STONE SHALL BE BETWEEN 1 1/2" AND 2" WASHED CRUSHED STONE
** ONE INSPECTION HATCH TO BE BROUGHT TO SURFACE PER TRENCH. RANDOMLY LOCATED ALONG TRENCH.

INFILTRATION CHAMBERS

NOT TO SCALE

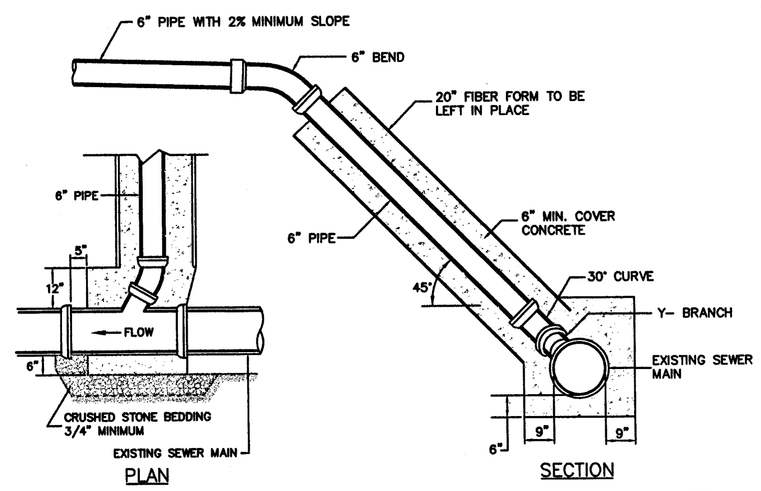

SEWER CHIMNEY WITH 45° CONNECT TO EXISTING SEWER

NOT TO SCALE

P:\2008 projects\2008-038 351 Summer St Somerville\dwg_ENGINEERING\08-038 SP.dwg

Copyright 2009 Design Consultants, Inc.

Design Consultants, Inc.
Consulting Engineers and Surveyors
DESIGN CONSULTANTS BUILDING
265 MEDFORD STREET
SOMERVILLE, MA 02143
(617) 776-3350

SCALE:
HORIZ: _____
VERT: _____

NO.	DATE	BY	REVISIONS

COMMONWEALTH OF MASSACHUSETTS 35844 DAVID GIAN GRANDE REGISTERED PROFESSIONAL ENGINEER

DESIGNED: RB
DRAFTED: RB
CHECKED: DG
APPROVED: DG

DETAILS SHEET 1

343-351 SUMMER STREET

PLAN OF LAND IN
SOMERVILLE, MASSACHUSETTS
PREPARED FOR
STRATEGIC CAPITAL GROUP, LLC

PROJECT NO. 2008-038
DATE: NOV. 3, 2009
SHEET NO. 3 OF 4

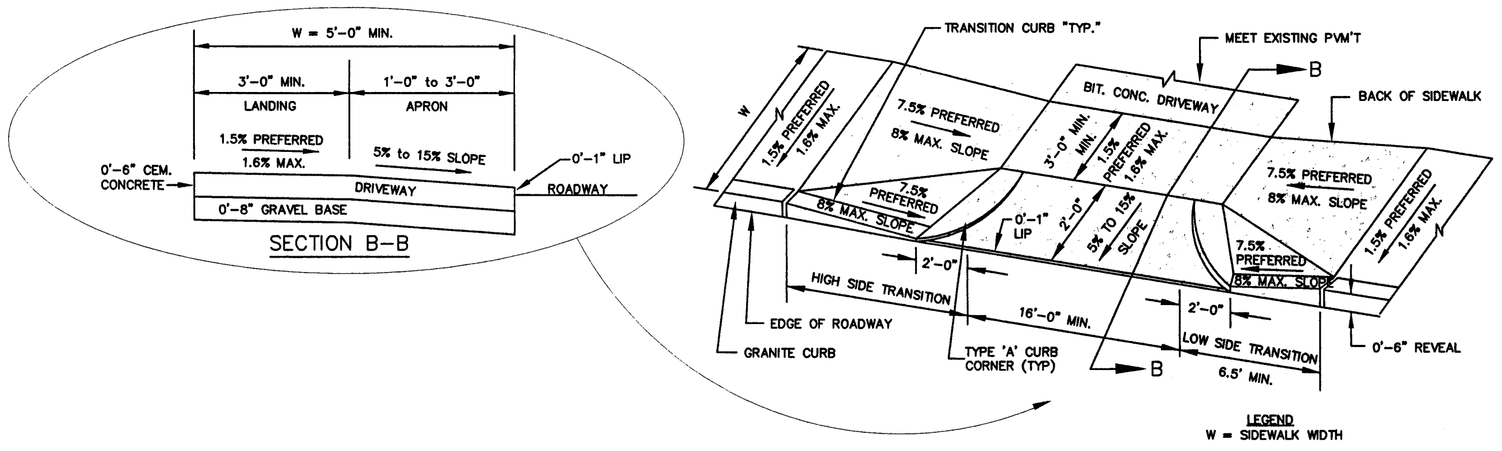

DRIVEWAYS – 5 FT MIN. SIDEWALK 2 FT CURB CORNERS

NOT TO SCALE

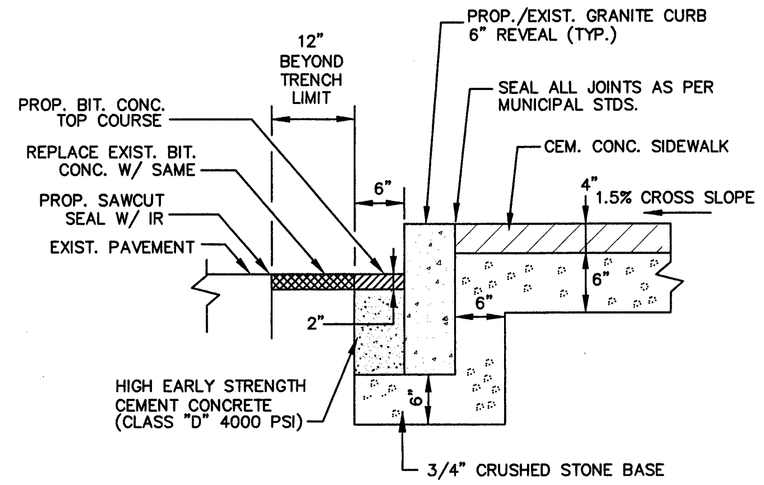

GRANITE CURB IN EXISTING ROAD PAVEMENT W/ NEW SIDEWALK

NOT TO SCALE

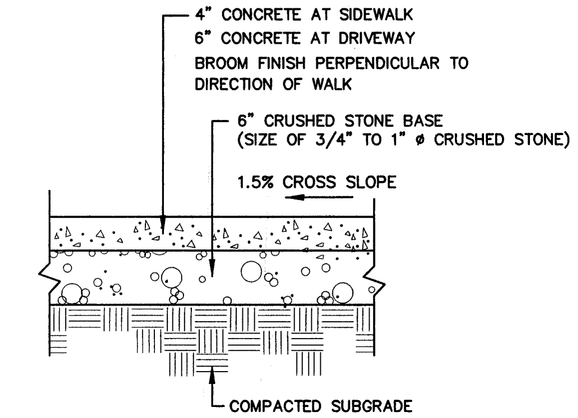

NOTES:

1. PROVIDE ½" CONSTRUCTION CONTROL JOINT WITH PREFORMED EXPANSION MATERIAL EVERY 20'-0" O.C. MAX.
2. PROVIDE A TOOLED DUMMY JOINT ¼"W x ½"D AS NEEDED TO PROVIDE SYMMETRY.

CEMENT CONCRETE SIDEWALK

NOT TO SCALE

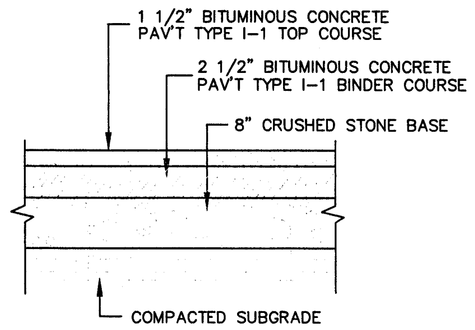

BITUMINOUS CONCRETE PAVEMENT

NOT TO SCALE

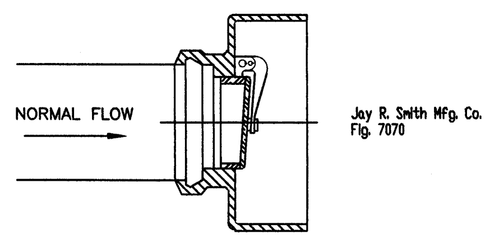

BACKWATER VALVE – JAY R. SMITH MODEL 7070

NOT TO SCALE

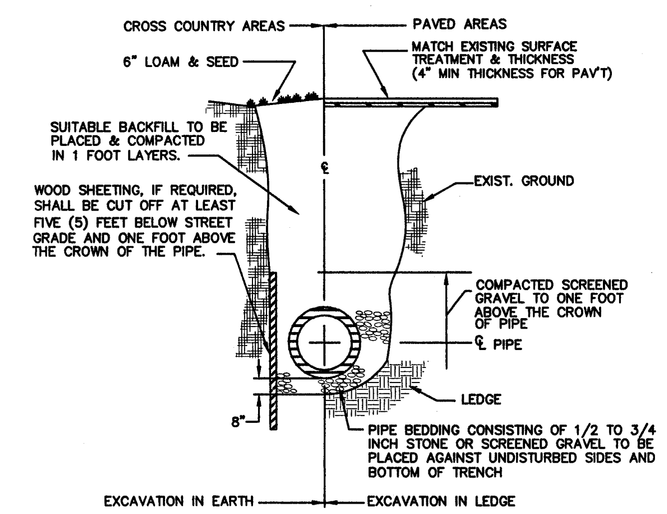

TRENCH EXCAVATION

NOT TO SCALE

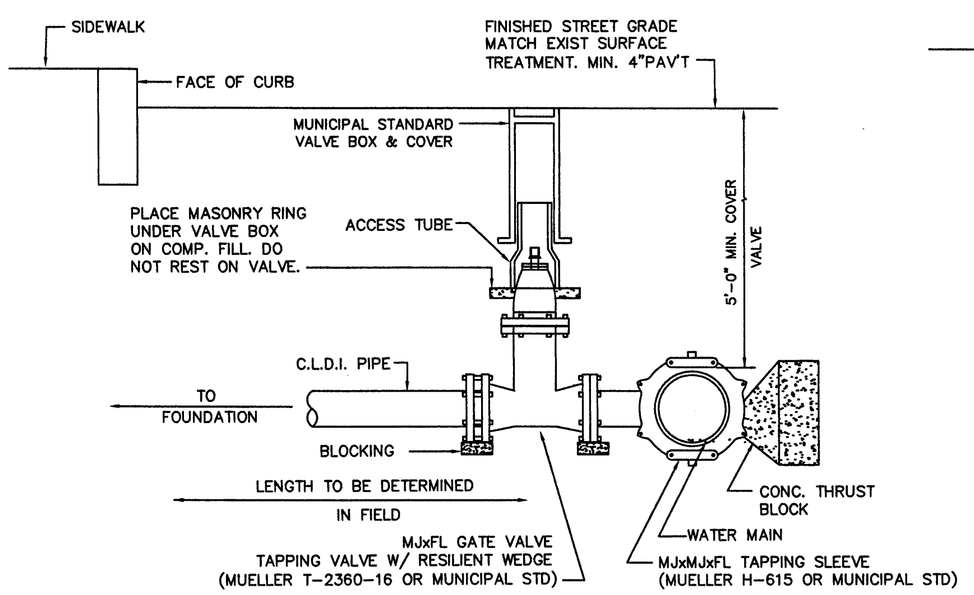

NOTE: 1. ALL WATER DISTRIBUTION VALVES, FITTINGS, AND PIPING SHALL COMPLY WITH ALL MUNICIPAL STANDARDS.

2. DETAIL UTILIZED FOR 4, 6, OR 8 INCH SERVICE PIPE.

WATER CONNECTION WITH WET TAP FOR 4 & 6 INCH SERVICE PIPE

NOT TO SCALE

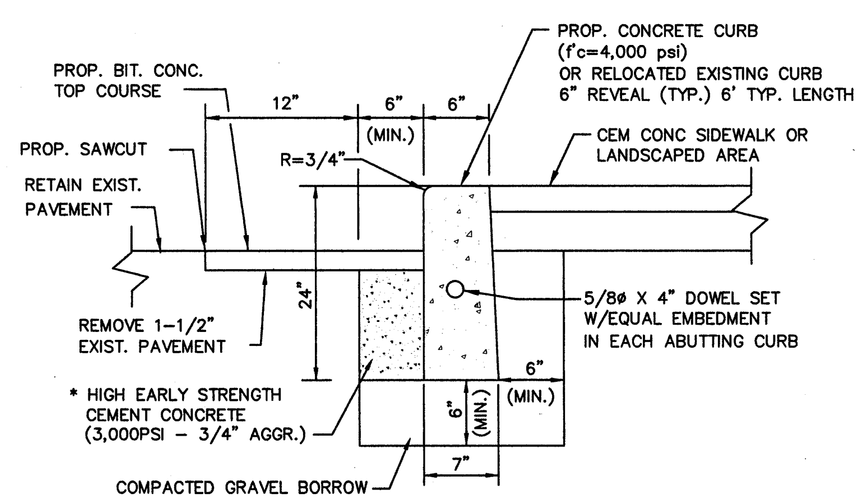

* HIGH EARLY STRENGTH CONCRETE BASE COURSE SHALL BE INCLUDED IN THE LINEAR FOOT PRICE OF CONCRETE CURB INCLUDE ONLY IF BINDER HAS BEEN INSTALLED PRIOR TO CURBING

PRECAST CONCRETE CURB

NOT TO SCALE

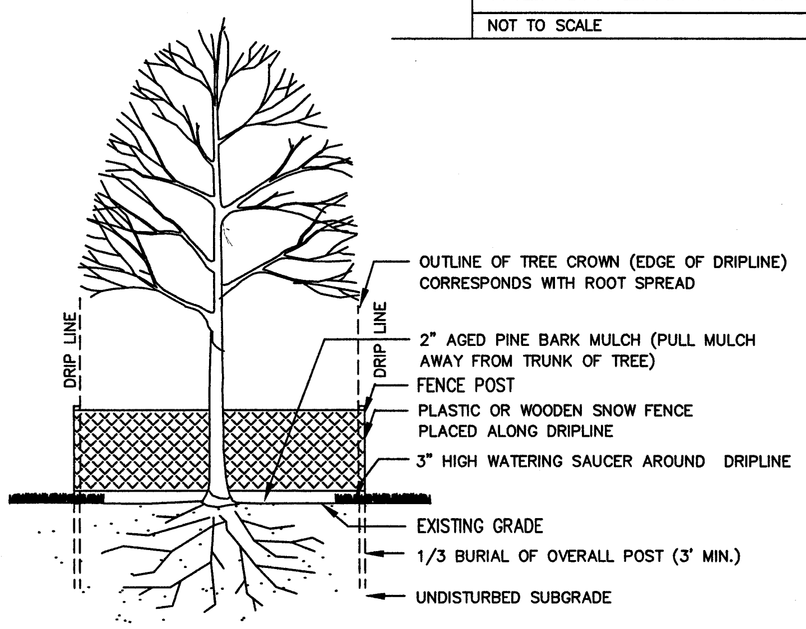

TREE PROTECTION

NOT TO SCALE

Copyright 2009 Design Consultants, Inc.

P:\2008 projects\2008-038 351 Summer St Somerville\dwg_ENGINEERING\08-038 SP.dwg

Design Consultants, Inc.
Consulting Engineers and Surveyors
DESIGN CONSULTANTS BUILDING
265 MEDFORD STREET
SOMERVILLE, MA 02143
(617) 776-3350

SCALE:
HORIZ: _____
VERT: _____

NO.	DATE	BY	REVISIONS

COMMONWEALTH OF MASSACHUSETTS 35844 DAVID A. GIAN GRANDE REGISTERED PROFESSIONAL ENGINEER

DESIGNED: RB
DRAFTED: RB
CHECKED: DG
APPROVED: DG

DETAILS SHEET 2

343-351 SUMMER STREET

PLAN OF LAND IN
SOMERVILLE, MASSACHUSETTS
PREPARED FOR
STRATEGIC CAPITAL GROUP, LLC

PROJECT NO. 2008-038
DATE: NOV. 3, 2009
SHEET NO. 4 OF 4

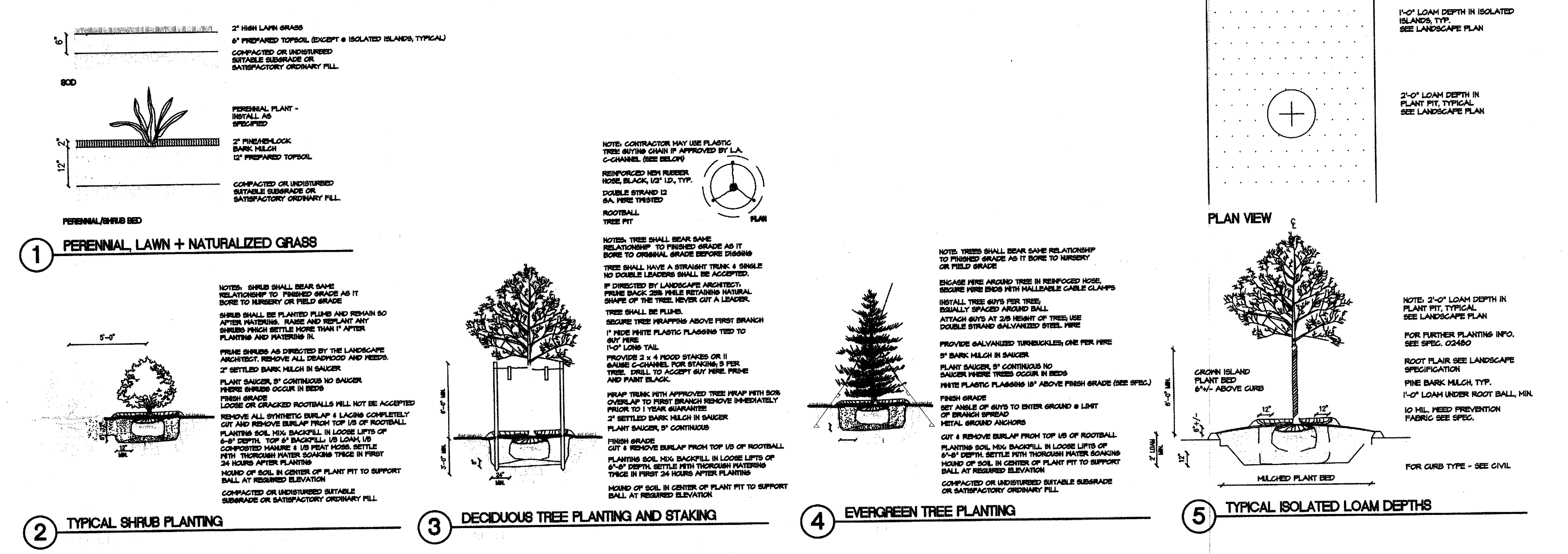

GENERAL NOTES

1. All contractors shall inspect site prior to bidding to verify existing conditions for themselves.
2. The Contractor shall supply all plant material in quantities sufficient to complete the planting shown on the drawings.
3. All plant material shall conform to the guidelines established by "The American Standard for Nursery Stock", published by the American Association of Nurserymen, Inc. ANSI Z60.1-Current Edition.
4. All plants to be balled in burlap or container grown. No plastic burlap.
5. All plants to be approved by the Landscape Architect.
6. Stake location of all proposed plant material for approval of Landscape Architect prior to commencement of planting.
7. The landscape contractor shall guarantee all plant materials for one (1) full year from date of acceptance.
8. Heal all construction scars with lawn or mulch, as indicated by drawings and/ or Landscape Architect.
9. Street Trees shall remain and have installed in a 4'x9' ADA compliant tree grate.

PLANT MATERIAL LIST

SYM.	QTY.	BOTANICAL NAME	COMMON NAME	SIZE	ROOT	REMARKS
EVERGREEN TREES						
PS	7	PINUS STROBUS	EASTERN WHITE PINE	5-6'	B&B	NATURAL SHAPE, UNSHEARED
DECIDUOUS AND ORNAMENTAL TREES						
AG	5	AMELANCHIER GRANDIFLORA 'ROBIN HILL'	ROBIN HILL SERVICEBERRY	6-7'	B&B	(7) + STEM CLUMP
GT	4	GLEDITSIA TRIACANTHOS 'SKYLINE'	SKYLINE HONEYLOCUSTS	2 1/2 -3"	B&B	STRAIGHT SINGLE LEADER SPECIMEN
SHRUBS						
AD	8	AZALEA 'DELEWARE VALLEY WHITE'	DELEWARE VALLEY WHITE AZALEA	2 1/2-3'	B&B	
BS	31	BUXUS SEMPERVIRENS 'NEWPORT BLUE'	NEWPORT BLUE BOXWOOD	2 1/2-3'	B&B	CLIP TO HEDGE
IC	22	ILEX CRENATA 'SKY PENCIL'	SKY PENCIL JAPANESE HOLLY	#5	B&B	
IGC	27	ILEX GLABRA 'COMPACTA'	DWARF INKBERRY	2 1/2-3'	B&B	
JS	24	JUNIPERUS C. 'SARGENTII'	SARGENT JUNIPER	18 -24"	B&B	
PJM	16	RHODODENDRON 'PJM'	PJM RHODODENDRON	2 1/2-3'	B&B	
RW	8	RHODODENDRON 'WILSONI'	WILSON RHODODENDRON	2 1/2-3'	B&B	
SJ	16	SPIRAEA J. 'LITTLE PRINCESS'	LITTLE PRINCESS SPIREA	2 1/2-3'	B&B	
TxM	22	TAXUS M. 'DENSIFORMIS'	DENSE SPREADING YEW	2 1/2-3'	B&B	
VC	9	VIBURNUM CARLESII	KOREANSPICE VIBURNUM	2 1/2-3'	B&B	
PERENNIALS AND GROUNDCOVER						
HH	58	HEMEROCALLIS 'HAPPY RETURNS'	HAPPY RETURNS DAYLILLY'S	GAL	GAL	
IS	25	IRIS SIBERICA 'CAESARS BROTHER'	CAESARS BROTHERS IRIS	GAL	GAL	
VM	10	VINCA MINOR	PERIWINKLE	FLAT	FLAT	FLAT=50 PT (2/SQ.')

OPEN SPACE:

TOTAL PROPERTY: 41,466 SQ'
OPEN SPACE: 9,000 SQ'
OPEN SPACE RATIO: 22%

GRAPHIC LEGEND

- EXISTING VEGETATION TO REMAIN
- EXISTING TREES TO REMAIN
- PROPOSED EVERGREEN TREES
- PROPOSED DECIDUOUS SHADE TREES / STREET TREES
- PROPOSED ORNAMENTAL & FLOWERING TREES
- PROPOSED EVERGREEN & DECIDUOUS SHRUBS
- SPECIAL PAVING
- EVERGREEN GROUNDCOVER
- DROUGHT TOLERANT PLANTS
- SOD
- POTENTIAL LIVE ROOF GRID
- 3' // 4' HIGH ORNAMENTAL METAL FENCE
- 6' HIGH PERIMETER PRIVACY FENCE W/ PICKET TOPPER
- 6' HIGH UNIT PRIVACY FENCE W/ CURVED LOWER SECTION
- TRELLIS
- WALL MOUNTED CUT-OFF HORIZONTAL LIGHT FIXTURE 100 W HPS
- 12' HIGH POLE HIGH CUT-OFF LIGHT FIXTURE 150 W HPS

LANDSCAPE NOTES:

LOAM DEPTHS SHALL BE AS FOLLOWS:

A. LAWN AREAS - 6" ROLLED THICKNESS
B. PLANT BEDS - 1 -0" LOAM DEPTH IN THE PLANTED AREA WITH 2" MULCH.
C. ISOLATED PLANTED ISLANDS - 1' - 0" LOAM DEPTH

SITE LIGHTING

Due to the urban nature of the site, lighting levels have been designed as minimal and offer the motorist direction in and out of the project site. Light levels at the parking areas have been increased due to the increase of motorist and pedestrian activity. Lighting levels will be augmented by Architectural wall mounted / soffit lighting on the Buildings. All site fixtures are to have High Cut-Off Optics with house shields where required.

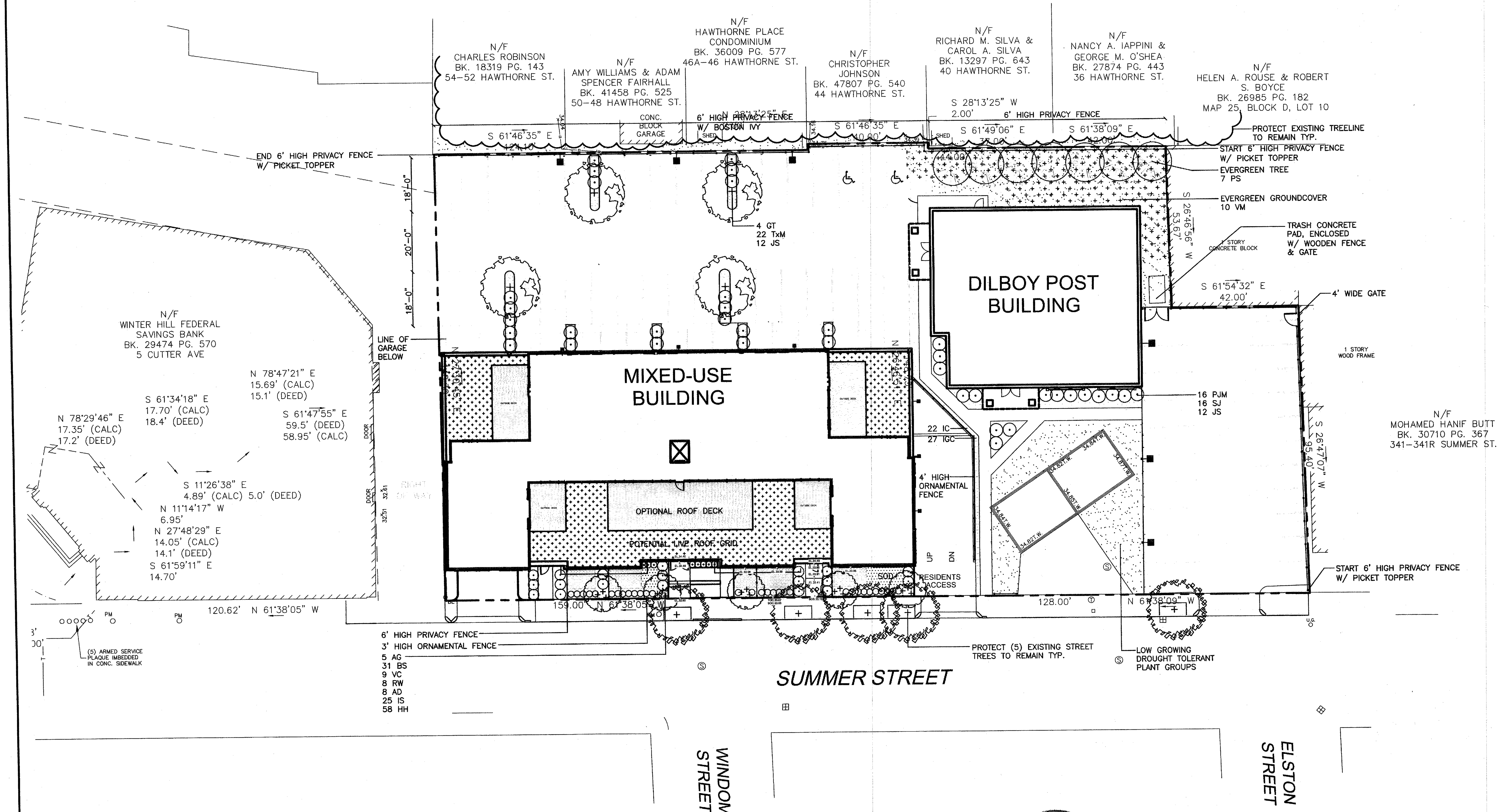

2.	2/05/10	WFA	REVISED PER OWNER COMMENTS
1.	1/28/10	WFA	REVISED PER OWNER COMMENTS
NO.	DATE	BY	REVISIONS

Design Consultants, Inc.

WILLIAM FLEMING ASSOCIATES incorporated
LANDSCAPE ARCHITECTURE
PLANNING
5 Central Square
Third Floor
Stoneham, MA. 02180
T 781 438 3088
F 781 438 3611
E wfa@williamfleming.com

SCALE:
HORIZ: 1"= 20'

DESIGNED: WFA
DRAFTED: WFA
CHECKED: WFA
APPROVED: WFA

LANDSCAPE PLAN

343-351 SUMMER STREET

PLAN OF LAND IN
SOMERVILLE, MASSACHUSETTS
PREPARED FOR
STRATEGIC CAPITAL GROUP LLC

PROJECT NO. 2008-038
DATE: NOV. 3, 2009
SHEET NO. 1 OF 2

ARCHITECTURAL ABBREVIATIONS

&	AND

A

AB	ANCHOR BOLT
ACFL	ACCESS FLOOR
ACOUS	ACOUSTICAL
ACT	ACOUSTICAL CEILING TILE
AD	AREA DRAIN
ADD	ADDENDUM
ADDL	ADDITIONAL
ADJ	ADJUST/ABLE
ADJ	ADJACENT
ADMIN	ADMINISTRATION
AFF	ABOVE FINISH FLOOR
AHU	AIR HANDLING UNIT
ALT	ALTERNATE
ALUM	ALUMINUM
ANUN	ANNUNCIATOR
AP	ACCESS PANEL
APC	ARCHITECTURAL PRECAST CONCRETE
APROX	APPROXIMATE
ARCH	ARCHITECTURAL
AUTO	AUTOMATIC
AWT	ACOUSTICAL WALL TREATMENT

B

BA	BUILDING ACCESSORY
BBD	BULLETIN BOARD
BC	BRICK COURSES
BD	BOARD
BFE	BOTTOM FOOTING ELEVATION
BG	BUMPER GUARD
BIT	BITUMINOUS
BKT	BRACKET
BLDG	BUILDING
BLKG	BLOCKING
BLT	BORROWED LIGHT
BLW	BELOW
BM	BEAM
BO	BY OWNER
BOF	BY OWNER FUTURE
BOT	BOTTOM
BR	BRICK
BRG	BEARING
BRL	BRICK LEDGE
BSMT	BASEMENT
BTWN	BETWEEN
BUR	BUILT-UP ROOFING

C

C	CHANNEL
C DISP	CUP DISPENSER
CAB	CABINET
CG	CORNER GUARD
CH	COAT HOOK
CJT	CONTROL JOINT
CCTV	CLOSED CIRCUIT TELEVISION

C

CD	COILING DOOR
CG	COILING GRILLE
CL	CENTER LINE
CL	CLASS
CLG	CEILING
CLR	CLEAR
CM	CONSTRUCTION MANAGER
CMU	CONCRETE MASONRY UNIT
CO	CLEANOUT
CO	CASED OPENING
COL	COLUMN
COMB	COMBINATION/ED
CONC	CONCRETE
CONF	CONFERENCE
CONN	CONNECT/ED/ION
CONST	CONSTRUCTION
CONT	CONTINUE/OUS
CONTR	CONTRACTOR
COORD	COORDINATE
CORR	CORRIDOR
CPT	CARPET
CT	CERAMIC TILE
CTR	CENTER
CTSK	COUNTERSUNK
CUH	CABINET UNIT HEATER
CW	CURTAIN WALL
CW	COLD WATER
CYL	CYLINDER

D

D	DEPTH OR DEEP
DEMO	DEMOLITION
DEPR	DEPRESSION
DEPT	DEPARTMENT
DET	DETAIL/S
DF	DRINKING FOUNTAIN
DIA	DIAMETER
DIAG	DIAGONAL
DIFF	DIFFUSER
DIM	DIMENSION
DISP	DISPENSER
DIST	DISTRIBUTION
DIV	DIVISION
DJT	DUMMY JOINT
DN	DOWN
DP	DEMOUNTABLE PARTITION
DP	DATA PROCESSING
DR	DOOR
DS	DOWNSPOUT
DW	DUMBWAITER
DWG	DRAWING
DWLS	DOWEL/S

E

E	EXISTING
EXIST	EXISTING
EC	ELECTRIC CABINET
EF	EXHAUST FAN
EIFS	EXTERIOR INSULATION AND FINISH SYSTEM

E

EJT	EXPANSION JOINT
EL	ELEVATION
ELEC	ELECTRICAL
ELEV	ELEVATOR
EMERG	EMERGENCY
ENCL	ENCLOSURE
ENTR	ENTRANCE
EO	ELECTRICAL OUTLET
EP	EXPLOSION PROOF
EQ	EQUAL
EQUIP	EQUIPMENT
ES	END SECTION
EWC	ELECTRIC WATER COOLER
EXA	EXHAUST AIR
EXC	EXCAVATE/ED/ION
EXH	EXHAUST HOOD
EXIST	EXISTING
EXP	EXPANSION
EXT	EXTERIOR

F

FA	FIRE ALARM
FB	FIRE BLANKET
FD	FLOOR DRAIN
FDN	FOUNDATION
FDV	FIRE DEPARTMENT VALVE
FE	FIRE EXTINGUISHER
FGS	FOAM GASKET SEAL
FH	FIRE HOSE
FHP	FULL HEIGHT PARTITION
FHV	FIRE HOSE VALVE
FIN	FINISH
FIXT	FIXTURE
FL	FLOOR
FL	FLOW LINE
FLASH	FLASHING
FLEX	FLEXIBLE
FLG	FLANGE
FLUOR	FLUORESCENT
FP	FIRE PROOFING

F

FRMG	FRAMING
FS	FULL SIZE
FS	FLOOR SINK
FSTOP	FIRESTOPPING
FT	FOOT/FEET
FTG	FOOTING
FTR	FIN TUBE RADIATION
FURR	FURRING
FUT	FUTURE

G

GA	GAUGE
GAL	GALLONS
GALV	GALVINIZED
GB	GRAB BAR
GB	GRADE BEAM
GC	GENERAL CONTRACTOR
GEN	GENERATOR
GEN	GENERAL
GL	GLASS
GMU	GLASS MASONRY UNIT
GR	GRADE
GWB	GYPSUM BOARD
GWB/SK	GYPSUM BLUE BOARD W/ PLASTER SKIM COAT
GYP SHGT	GYPSUM SHEATHING

H

H	HIGH
HB	HOSE BIB
HD	HAND DRYER
HDCP	HANDICAP
HDR	HEADER
HDW	HARDWARE
HM	HOLLOW METAL
HORIZ	HORIZONTAL
HPT	HIGHPOINT
HR	HANDRAIL
HT	HEIGHT
HTR	HEATER
HVAC	HEATING, VENTILATING, AIR CONDITIONING
HW	HOT WATER
HWD	HARDWOOD

I

IC	INTERCOM
ID	INSIDE DIAMETER
IN	INCH
INSUL	INSULATION
INT	INTERIOR
ISO	ISOLATION

J

JAN	JANITOR
JB	JUNCTION BOX
JST	JOIST
JT	JOINT

K

KO	KNOCK OUT

L

L	ANGLE
L	LAVATORY
LAV	LAVATORY
LB	POUND
LCD	LINEAR CEILING DIFFUSER
LF	LINE FIGURED
LIN	LINEAR
LKR	LOCKER
LLH	LONG LEG HORIZONTAL
LLV	LONG LEG VERTICAL
LMC	LINEAR METAL CEILING
LOC	LOCATION OR LOCATE
LPT	LOW POINT
LS	LAWN SPRINKLING
LT	LIGHT
LTG	LIGHTING
LVR	LOUVER
LWC	LINEAR WOOD CEILING

M

M	MIDDLE
MAN	MANUAL
MATL	MATERIAL
MAX	MAXIMUM
MBD	MARKER BOARD
MC	MEDICINE CABINET
MCU	MODULAR COOLING UNIT
MECH	MECHANICAL
MEMB	MEMBRANE
MET	METAL
MEZZ	MEZZANINE
MFR	MANUFACTURER
MH	MANHOLE
MHC	MATERIAL HANDLING CONVEYOR
MIN	MINIMUM
MIR	MIRROR
MISC	MISCELLANEOUS
MO	MASONRY OPENING
MONO	MONOLITHIC
MPC	METAL PAN CEILING
MPU	MULTI-PURPOSE UNIT
MTD	MOUNTED
MTR	MOTOR
MULL	MULLION

N

NA	NOT APPLICABLE
NIC	NOT IN CONTRACT
NO	NUMBER
NOM	NOMINAL
NRC	NOISE REDUCTION COEFFICIENT
NT	NOTE
NTS	NOT TO SCALE

O

OC	ON CENTER
OD	OUTSIDE DIAMETER
OFF	OFFICE
OH	OVERHEAD
OP	OPERABLE PARTITION
OPER	OPERATOR
OPNG	OPENING
OPP	OPPOSITE
ORD	OVERFLOW ROOF DRAIN

P

PART	PARTITION
PB	PUSH BUTTON
PC	PRECAST CONCRETE
PCD	PAPER CUP DISPENSER
PED	PEDESTAL
PL	PLATE
PL	PROPERTY LINE
PLAM	PLASTIC LAMINATE
PLBG	PLUMBING
PLS	PLASTER
PLW	PLYWOOD
PNL	PANEL
PR	PAIR
PRELIM	PRELIMINARY
PRES	PLASTIC RESIN
PRESS	PRESSURE
PRIM	PRIMARY
PROJ	PROJECTION
PRV	POWER ROOF VENTILATOR
PT	PAINT
PTC	PAPER TOWEL CABINET
PTR	PRINTER
PVC	POLYVINYL CHLORIDE

Q

QT	QUARRY TILE

R

R	RADIUS
R	RISER
RA	RETURN AIR
RAD	RADIATION
RB	RESILIENT BASE
RD	ROOF DRAIN
RE	RELOCATE EXISTING
REC	RECESSED
REF	REFERENCE
REFR	REFRIGERATOR
REG	REGISTER
REINF	REINFORCE/ED/ING
REM	REMOVE
REQD	REQUIRED
RET	RETAINING
REV	REVERSE
REVISE	REVISE
RF	RESILIENT FLOOR
RH	ROOF HATCH
RM	ROOM
RO	ROUGH OPENING
RS	ROUGH SLAB
RWC	RAIN WATER CONDUCTOR

S

S	SINK
SCHED	SCHEDULE
SD	SHOWER DRAIN
SD	SMOKE DAMPER
SDISP	SOAP DISPENSER
SECT	SECTION
SECY	SECRETARY
SF	STORE FRONT
SF	SQUARE FOOT
SH	SHOWER
SHD	SHOWER HEAD
SHT	SHEET
SHTG	SHEATHING
SIM	SIMILAR
SL	SEALER
SLNT	SEALANT
SLV	SLEEVE
SM	SURFACE MOUNTED
SNC	SANITARY NAPKIN CABINET
SND	SANITARY NAPKIN DISPOSER
SOG	SLAB ON GRADE
SP	STANDPIPE
SPEC	SPECIFICATIONS
SPR	SINGLE PLY ROOF
SQ	SQUARE
SQ YD	SQUARE YARD
SR	SERVICE RECEPTOR
SS	SERVICE SINK
SST	STAINLESS STEEL
ST	STREET
ST	STONE TILE
STC	SOUND TRANSMISSION
STD	STANDARD
STL	STEEL
STN	STONE
STNL	STONE LEDGE
STOR	STORAGE
STRUCT	STRUCTURAL

S

STS	STEEL STRUCTURE
SUPV	SUPERVISOR
SUSP	SUSPENDED
SW	STEEL WINDOWS
SW	SWITCH
SWD	SOFTWOOD
SYM	SYMMETRICAL

T

T	TOP
TAN	TANGENT
TBD	TACKBOARD
TC	TIME CLOCK
TCAB	TOWEL CABINET
TDISP	TISSUE DISPENSER
TDR	TRENCH DRAIN
TEL	TELEPHONE
TEMP	TEMPERATURE
TER	TERRAZZO
TG	TONGUE & GROOVE
THRES	THRESHOLD
TPG	TEMPERED PLATE GLASS
TPH	TOILET PAPER HOLDER
TR	TREAD
TRANSF	TRANSFORMER
TS	TUBE SECTION
TV	TELEVISION
TYP	TYPICAL

U

U	URINAL
UC	UNDERCUT
UFD	UNDER FLOOR DUCT
UG	UNDERGROUND
UH	UNIT HEATER
UNFIN	UNFINISHED
UNO	UNLESS NOTED OTHERWISE
US	UTILITY SHELF
UTIL	UTILITY

V

VC	VALVE CABINET
VENT	VENTILATION
VERT	VERTICAL
VEST	VESTIBULE
VR	VAPOR RETARDER
VTR	VENT THROUGH ROOF

W

W	WIDTH/WIDE
W	WIDE FLANGE
W/	WITH
W/O	WITHOUT
WC	WATER CLOSET
WC	WALL COVERING
WD	WOOD
WDW	WINDOW
WG	WALL GUARD
WH	WALL HYDRANT
WHCH	WHEELCHAIR
WHTR	WATER HEATER
WP	WATERPROOF
WR	WASTE RECEPTACLE
WS	WEATHERSTRIP
WSCT	WAINSCOT
WT	WINDOW TREATMENT
WT	WEIGHT
WW	WOOD WINDOW
WWF	WELDED WIRE FABRIC

SYMBOLS

- LEVEL LINE, CONTROL OR DATUM ELEVATION
- REVISION NUMBER (A)
- PARTITION TYPE (C)
- CASEWORK TYPE (C)
- INTERIOR WINDOW TYPE (W)
- WINDOW TYPE (W)
- COLUMN REFERENCE GRID (A)
- BUILDING SECTION REFERENCE DRAWING NUMBER (X / AX.X)
- WALL SECTION REFERENCE DRAWING NUMBER (X / AX.X)
- SECTION DETAIL REFERENCE DRAWING NUMBER (X / AX.X)
- DIMENSION LINE (1 1/2")
- BREAK LINE TO BREAK OFF PARTS OF A DRAWING
- DOTTED LINE HIDDEN OR CONSTRUCTION ABOVE, BEYOND
- DETAIL REFERENCE DRAWING NUMBER (X / AX.X)
- EXTERIOR ELEVATION NUMBER (X / AX.X)
- INTERIOR ELEVATION KEY (1 / 2 / 3 / 4 / AX.X)
- ROOM/SPACE NUMBER (141)
- DOOR NUMBER (111B)
- SEALANT AND BACKER ROD JOINT (S)
- DASH AND DOT CENTER LINE
- DASH AND DOUBLE DOT LINES PROPERTY LINES, BOUNDARY LINES

INDICATION OF MATERIALS

EARTH	EARTH/ COMPACT FILL	POROUS FILL/ GRAVEL
CONCRETE	CONCRETE	SAND MORTAR
MASONRY	BRICK	CONCRETE MASONRY UNIT
STONE	RUBBLE	MARBLE
METAL	STEEL/IRON	ALUMINUM
WOOD	WOOD SHIM	CONTINUOUS BLOCKING
	PLYWOOD	FINISH
GLASS	GLASS	GLASS BLOCK
INSULATION	BATT/ LOOSE FILL	RIGID
	FIRE SAFING	
FINISHES	GYPSUM WALL BOARD	ACOUSTICAL TILE

GENERAL NOTES

1. GENERAL CONDITIONS : THE GENERAL CONDITIONS FOR THIS CONTRACT SHALL BE AIA DOCUMENT A201 (1987 EDITION) EXCEPT AS HEREIN AMENDED.
2. SCOPE : WORK TO INCLUDE DEMOLITION AND CONSTRUCTION AS INDICATED ON THE DRAWINGS NECESSARY FOR A COMPLETE INSTALLATION. EACH CONTRACTOR SHALL RESPECT THE WORK OF OTHER CONTRACTORS AND ARE RESPONSIBLE FOR AND LIABLE TO REPAIR OR REPLACE ANY DAMAGE CAUSED BY THEIR WORK.
3. CODES : ALL WORK SHALL BE PERFORMED IN STRICT COMPLIANCE WITH LOCAL AND STATE CODES AND REGULATIONS HAVING JURISDICTION. THE CONTRACTOR SHALL PROTECT AND INDEMNIFY THE OWNER AND ARCHITECT AGAINST ANY CLAIM OR LIABILITY ARISING FROM ANY SUCH CODE OR REGULATION.
4. THE CONTRACTOR SHALL OBTAIN AND PAY FOR ALL REQUIRED PERMITS, INSPECTIONS AND APPROVALS.
5. QUALITY : WORKMANSHIP SHALL BE OF THE HIGHEST TYPE, AND MATERIALS USED OR SPECIFIED OF THE BEST QUALITY THAT THE MARKET AFFORDS. ALL INSTALLATIONS AND APPLICATIONS SHALL CONFORM TO THE MANUFACTURERS SPECIFICATIONS.
6. COORDINATION OF THE WORK : THE GENERAL CONTRACTOR SHALL COORDINATE THE WORK CONTRACT FROM THE CONTRACTOR OR THE OWNER. THE CONTRACTORS INSTRUCTIONS SHALL BE FOLLOWED BY ALL TRADES.
7. MECHANICAL TRADES : THE MECHANICAL AND ELECTRICAL TRADES SHALL INSTALL THEIR WORK AS RAPIDLY AS THE OTHER WORK PERMITS AND SHALL COMPLETE THIS WORK BY THE TIME THE OTHER TRADES HAVE FINISHED.
8. EXAMINATION OF THE SITE AND DOCUMENTS : THE CONTRACTOR, BEFORE SUBMITTING HIS PROPOSAL, SHALL VISIT THE SITE AND EXAMINE FOR HIMSELF ALL CONDITIONS AND LIMITATIONS WHICH EFFECT THE CONTRACT. THE CONTRACTOR SHALL CAREFULLY EXAMINE ALL CONTRACT DOCUMENTS. TITLES AND SUBDIVISIONS IN THESE DOCUMENTS ARE FOR CONVENIENCE, AND NO REAL OR ALLEGED ERRORS IN ARRANGEMENT OF MATTER SHALL BE REASON FOR OMISSION OR DUPLICATION BY ANY CONTRACTOR.
9. SEPARATE CONTRACTS : THE OWNER RESERVES THE RIGHT TO LET OTHER CONTRACTS IN CONNECTION WITH THE WORK. THE GENERAL CONTRACTOR SHALL AFFORD OTHER CONTRACTORS REASONABLE OPPORTUNITY FOR THE EXECUTION OF THEIR WORK AND SHALL PROPERLY CONNECT AND COORDINATE HIS WORK WITH THEIRS.
10. GUARANTEE : ALL MATERIALS AND WORKMANSHIP SHALL BE GUARANTEED FOR A PERIOD OF ONE YEAR FROM THE DATE OF FINAL ACCEPTANCE UNLESS SPECIFIED OTHERWISE FOR A LONGER PERIOD OF TIME ON CERTAIN ITEMS.
11. TRASH REMOVAL : PRIOR TO STARTING WORK, THE GENERAL CONTRACTOR SHALL PROVIDE A CONSTRUCTION DUMPSTER AND PICKUP SERVICE FOR ALL CONSTRUCTION DEBRIS (DUMPSTER LOCATION TO BE COORDINATED WITH THE OWNER). AT THE END OF EACH DAY, THE GENERAL CONTRACTOR SHALL REMOVE ALL TRASH AND DEBRIS FROM THE SITE AND OR WITHIN THE BUILDING. IF TRASH AND DEBRIS ARE NOT REMOVED, THE OWNER MAY (AT HIS OPTION) PAY FOR THE REMOVAL AND BACK CHARGE THE CONTRACTOR.
12. THE CONTRACTOR SHALL VERIFY ALL DIMENSIONS AND CONDITIONS AT THE SITE AND REPORT ANY DISCREPANCIES TO THE ARCHITECT BEFORE PROCEEDING WITH THE WORK.
13. ALL SECTIONS, DETAILS, MATERIALS, METHODS, ETC. SHOWN AND/OR NOTED ON ANY PLAN OR SECTION SHALL APPLY TO ALL OTHER SIMILAR LOCATIONS UNLESS OTHERWISE NOTED.
14. THE GENERAL CONTRACTOR SHALL SAFELY SHORE, BRACE, OR SUPPORT ALL WORK AS REQUIRED. THIS WORK SHALL BE THE FULL RESPONSIBILITY OF THE CONTRACTOR AND NO ACT, DIRECTION, OR REVIEW OF ANY SYSTEM OR METHOD BY THE ARCHITECT SHALL RELIEVE THE CONTRACTOR OF THIS RESPONSIBILITY.
15. IT IS NOT THE INTENT OF THESE DRAWINGS TO SHOW NOR INDICATE ANY OR ALL FASTENING OR FRAMING TECHNIQUES /DEVICES, NOR BE ABLE TO SHOW ALL CONDITIONS PRESENT.
16. ALL WORK IS NEW UNLESS OTHERWISE NOTED.
17. ALL WALLS AND CEILINGS TO BE 5/8in FIRE CODE OR 1/2in GYPSUM BOARD, 5/8in MOISTURE RESISTANT TYPE X OR 5/8in CEMENT BOARD. FINISH AND TEXTURE TO BE SELECTED BY OWNER. MATERIAL AS MANUFACTURED BY U.S. GYPSUM OR EQUAL FINISH (CEMENT ACCESSORIES AND TAPE OR SKIM COAT). ALL JOINTS AND NAIL HEADS READY FOR PAINT, TILE, WOOD TRIM, VWC, OR PANELING.
18. STORAGE : THE CONTRACTOR SHALL PROVIDE ON SITE WEATHER PROTECTED STORAGE SPACE, I.E.: TRAILER. STORAGE OF CONSTRUCTION MATERIALS IN THE EXISTING BUILDING WILL NOT BE PERMITTED.
19. PROTECTION : THE CONTRACTOR SHALL PROTECT ALL PUBLIC AND ADJACENT AREAS FROM DAMAGE DURING CONSTRUCTION.
20. TEMPORARY SERVICES : THE CONTRACTOR WILL PAY FOR EXISTING SERVICES (WATER, TELEPHONE AND ELECTRICITY) AND WILL TURN OVER THESE SERVICES TO THE OWNER UPON FINAL ACCEPTANCE OF THIS PROJECT.
21. THE CONTRACTOR SHALL VERIFY LOCATION AND ACTUAL DEPTH OF ALL EXISTING SANITARY PIPING, STORM DRAINS, GAS AND WATER MAINS, ELECTRIC LINES AND PIPES. HE IS ALSO ADVISED TO VERIFY ACTUAL INVERTS OF SANITARY AND STORM LINES BY HAND DUG TEST PITS WELL IN ADVANCE OF TRENCHING AND CONSTRUCTION. ANY DISCREPANCY IN THIS PLAN AND ACTUAL FIELD CONDITIONS SHALL BE REPORTED TO THE ARCHITECT. ALL NECESSARY PERMITS AND APPROVALS MUST BE OBTAINED FROM PROPER AUTHORITIES.
22. ARCHITECTURAL, MECHANICAL, ELECTRICAL, ELEVATOR, & SPRINKLER : EACH CONTRACTOR SHALL SUBMIT SHOP DRAWINGS TO THE ARCHITECT FOR APPROVAL PRIOR TO FABRICATION.
23. ALL WORK IS NEW UNLESS OTHERWISE NOTED.
24. DAMAGE : THE GENERAL CONTRACTOR IS RESPONSIBLE FOR ANY DAMAGE TO EXISTING BUILDING, WALLS, CEILINGS, FLOORS, FURNITURE AND FURNISHINGS. DAMAGED SURFACES DUE TO CONSTRUCTION TO BE PATCHED, REPAIRED AND/OR REPLACED AS REQUIRED AND BLEND TO MATCH EXISTING ADJACENT SURFACES AT NO ADDITIONAL COST TO OWNER.
25. THE GENERAL CONTRACTOR SHALL PREPARE A BOOKLET CONTAINING : LIST OF SUBCONTRACTORS USED ON THIS JOB WITH NAMES, ADDRESSES AND TELEPHONE NUMBERS. ALL WARRANTIES AND INSTRUCTION MANUALS FOR EQUIPMENT AND MATERIALS INSTALLED WILL BE ISSUED TO THE OWNER PRIOR TO FINAL ACCEPTANCE OF BUILDING, AND PRESENT BOOKLET TO OWNER PRIOR TO FINAL ACCEPTANCE OF OWNER.
26. CARPET AND/OR TILE : CARPET AND/OR TILE AS SELECTED AS PER DRAWINGS.
27. HANDICAPPED REQUIREMENTS : THE GENERAL CONTRACTOR WILL ACQUAINT HIMSELF WITH THE ARCHITECTURAL ACCESS BOARD (AAB) CODE FOR THE STATE OF MASSACHUSETTS AND THE ADA (AMERICANS WITH DISABILITIES ACT) TO ENSURE THAT THIS FACILITY WILL BE ACCESSIBLE.
28. SPRINKLER HEAD LOCATION : REFER TO N.F.P.A. STANDARDS. SPRINKLER HEADS TO BE LOCATED PER CODE. SHOP DRAWINGS ARE REQUIRED TO BE SUBMITTED TO THE CONTRACTOR FOR APPROVAL PRIOR TO INSTALLATION.
29. THE GENERAL CONTRACTOR SHALL COORDINATE THE LOCATION AND SIZE OF OPENINGS FOR VENTS, PIPES, INSERTS, BOXES, HANGERS, ETC.
30. ALL INTERIOR FINISHES AND FURNISHINGS FOR CEILINGS, WALL AND FLOORS SHALL BE CLASS I in WITH A FLAME SPREAD RATING OF 0 TO .25.
31. SUBMIT SAMPLES OF ALL PAINTS AND STAINS FOR APPROVAL PRIOR TO APPLICATION.
32. BEFORE COMMENCING WORK, THE GENERAL CONTRACTOR WILL MEET WITH THE APPOINTED COMPANY REPRESENTATIVE TO OUTLINE PHASING OF CONSTRUCTION AND DISPOSITION OF EXISTING CONSTRUCTION MATERIALS AND/OR EQUIPMENT.
33. ALL WOODS BLOCKING TO BE PRESSURE TREATED, FIRE RETARDANT.

PROJECT NAME

Summer Street Residences & Dilboy Post Building

PROJECT ADDRESS

351 Summer Street
Somerville MA 02143

CLIENT

Strategic Capital Group,LLC.

ARCHITECT

KHALSA DESIGN INC.

17 IVALOO STREET SUITE 400
SOMERVILLE, MA 02143

TELEPHONE: 617-591-8682 FAX: 617-591-2086

CONSULTANTS:

REGISTRATION

REGISTERED ARCHITECT — JAI SINGH KHALSA — No. 6045 — CAMBRIDGE, MA. — COMMONWEALTH OF MASSACHUSETTS

Project number	07042
Date	02-04-2010
Drawn by	KK-SA
Checked by	JSK
Scale	1 : 1

REVISIONS

No.	Description	Date

General Notes & Abreviations

A-001

Summer Street Residences & Dilboy Post Building

G:\07\07017-Dakota-Summer-St\ARCH\07017_SUMMER ST_02-02-2010.rvt

2/5/2010 12:08:20 PM

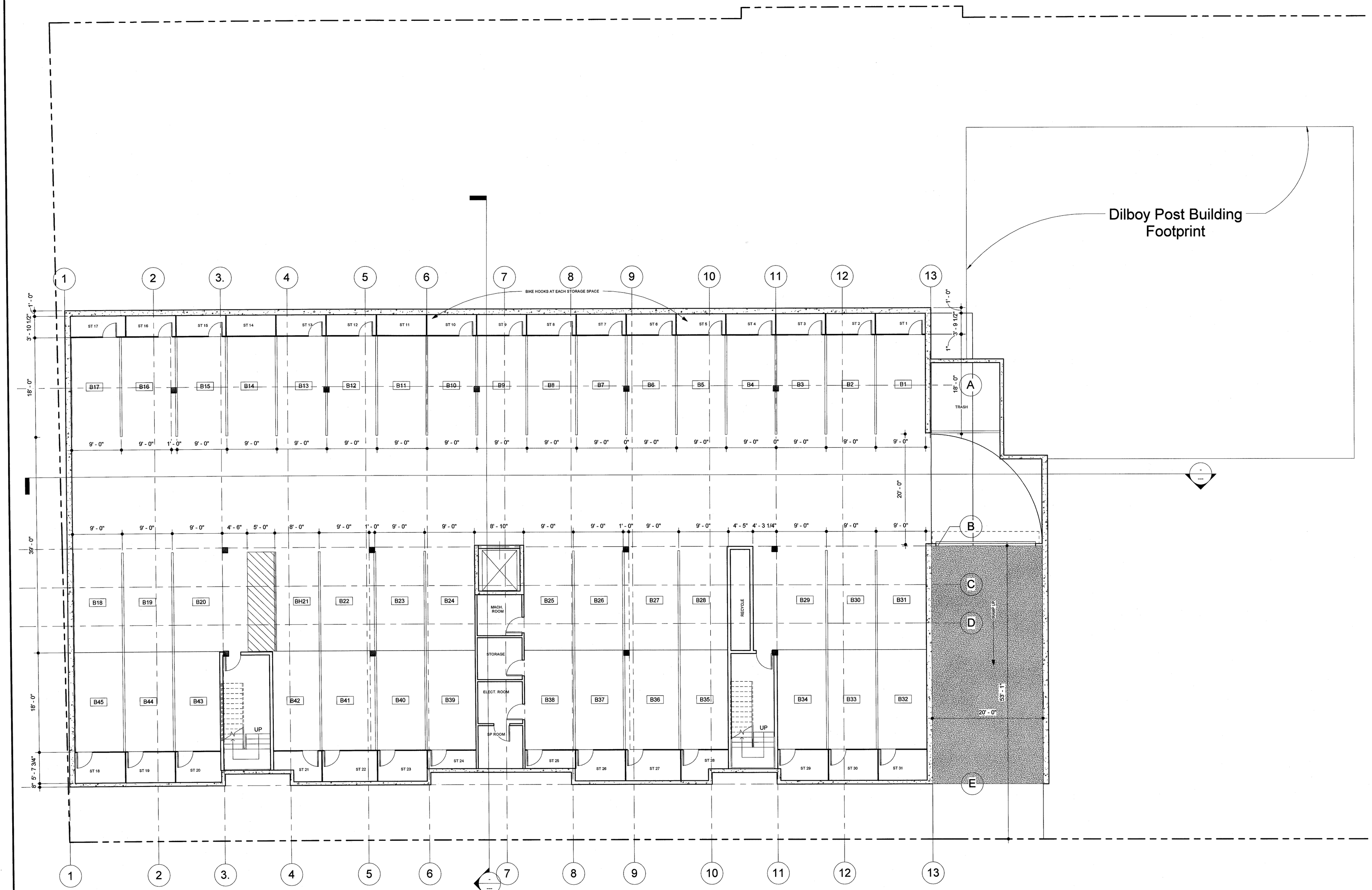

1 0-Garage Level
1/8" = 1'-0"

PROJECT NAME
Summer Street Residences & Dilboy Post Building

PROJECT ADDRESS
351 Summer Street
Somerville MA 02143

CLIENT
Strategic Capital Group,LLC.

ARCHITECT
KHALSA DESIGN INC.

17 IVALOO STREET SUITE 400
SOMERVILLE, MA 02143
TELEPHONE: 617-591-8682 FAX: 617-591-2086

CONSULTANTS:

REGISTRATION
REGISTERED ARCHITECT
JAI SINGH KHALSA
No. 6042
CAMBRIDGE
COMMONWEALTH OF MASSACHUSETTS

Project number	07042
Date	02-04-2010
Drawn by	KK-SA
Checked by	JSK
Scale	1/8" = 1'-0"

REVISIONS

No.	Description	Date

Garage Floor Plan

A-100

Summer Street Residences & Dilboy Post Building

G:\07\07017-Dakota-Summer-St\ARCH\07017_SUMMER ST_02-02-2010.rvt

2/5/2010 12:10:09 PM

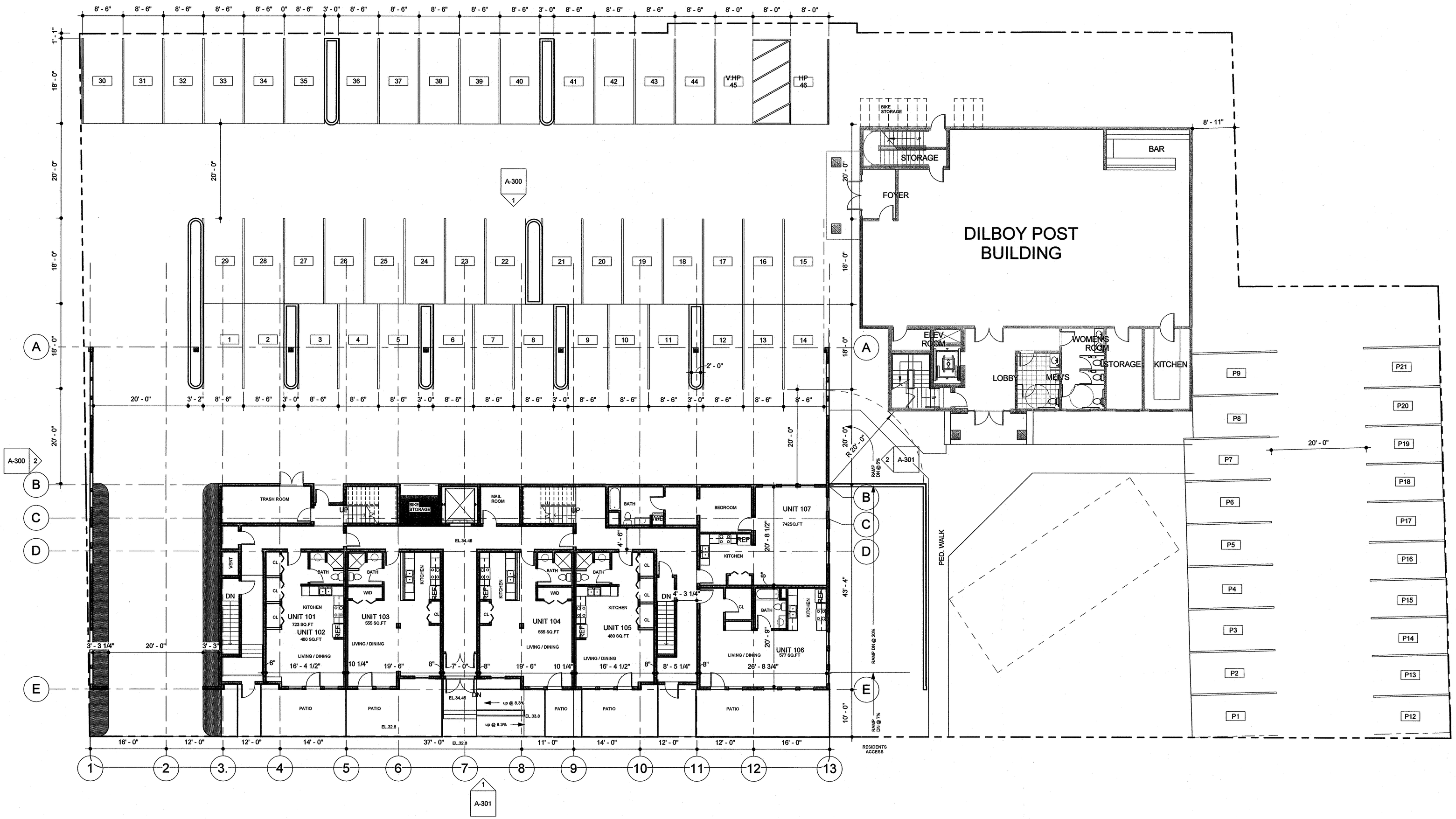

1 1st Floor Level
3/32" = 1'-0"

PROJECT NAME
Summer Street Residences & Dilboy Post Building

PROJECT ADDRESS
351 Summer Street
Somerville MA 02143

CLIENT
Strategic Capital Group,LLC.

ARCHITECT
KHALSA DESIGN INC.

17 IVALOO STREET SUITE 400
SOMERVILLE, MA 02143
TELEPHONE: 617-591-8682 FAX: 617-591-2086

CONSULTANTS:

REGISTRATION
REGISTERED ARCHITECT
JAI SINGH KHALSA
No. 6042
CAMBRIDGE, MA
COMMONWEALTH OF MASSACHUSETTS

Project number	07042
Date	02-04-2010
Drawn by	KK-SA
Checked by	JSK
Scale	3/32" = 1'-0"

REVISIONS

No.	Description	Date

1st Floor Plan

A-101

Summer Street Residences & Dilboy Post Building

G:\07\07017-Dakota-Summer-SN\ARCH\07017_SUMMER ST_02-02-2010.rvt
2/4/2010 5:23:28 PM

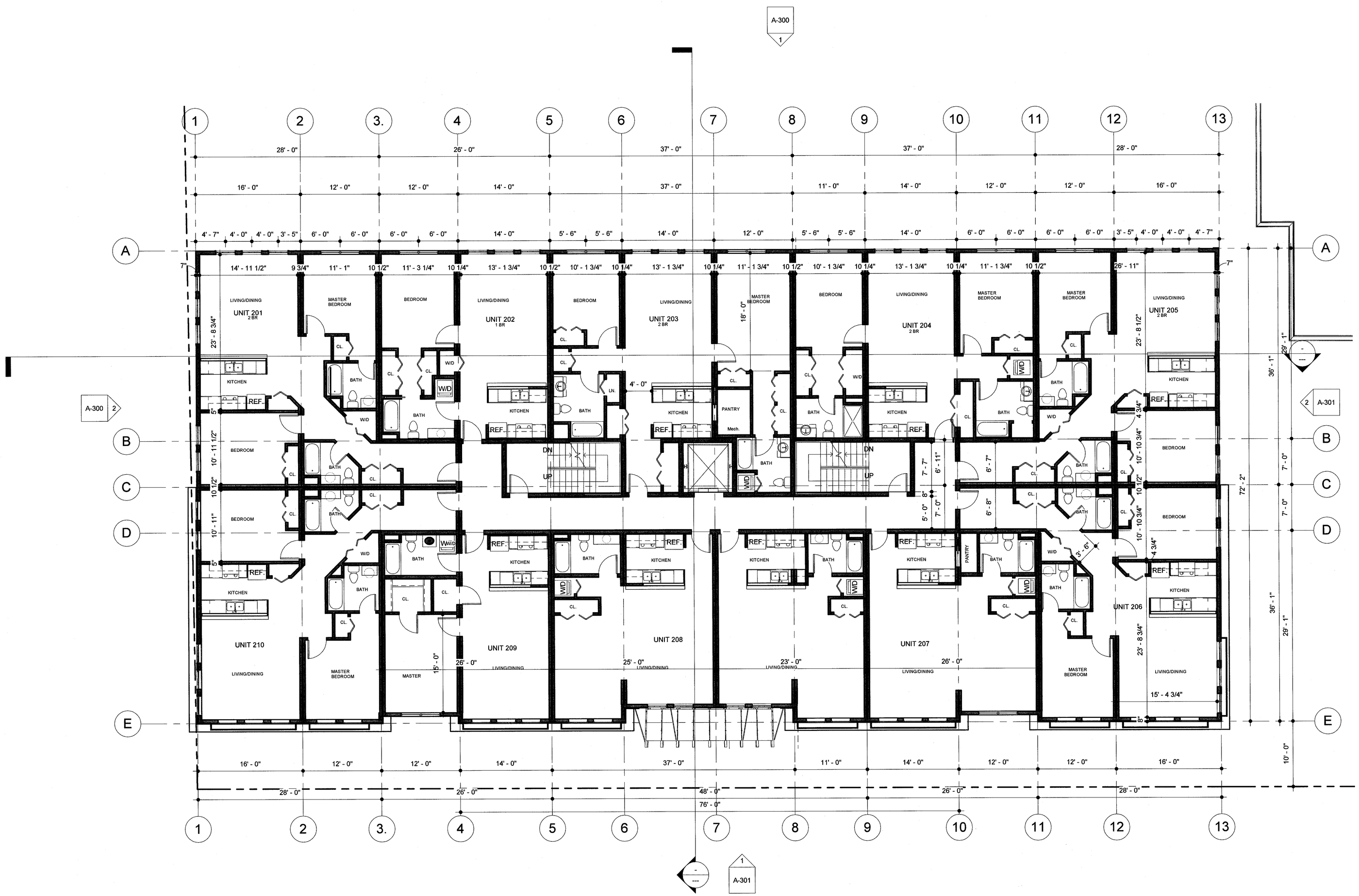

1 2nd Floor Level
1/8" = 1'-0"

PROJECT NAME
Summer Street Residences & Dilboy Post Building

PROJECT ADDRESS
351 Summer Street
Somerville MA 02143

CLIENT
Strategic Capital Group,LLC.

ARCHITECT
KHALSA DESIGN INC.

17 IVALOO STREET SUITE 400
SOMERVILLE, MA 02143
TELEPHONE: 617-591-8682 FAX: 617-591-2086

CONSULTANTS:

REGISTRATION

COMMONWEALTH OF MASSACHUSETTS
JAI SINGH KHALSA
No. 6042
CAMBRIDGE, MA.

Project number	07042
Date	02-04-2010
Drawn by	KK-SA
Checked by	JSK
Scale	1/8" = 1'-0"

REVISIONS

No.	Description	Date

2nd Floor Plan

A-102

Summer Street Residences & Dilboy Post Building

G:\07\07017-Dakota-Summer-SN\ARCH\07017_SUMMER ST_02-02-2010.rvt

2/4/2010 5:50:21 PM

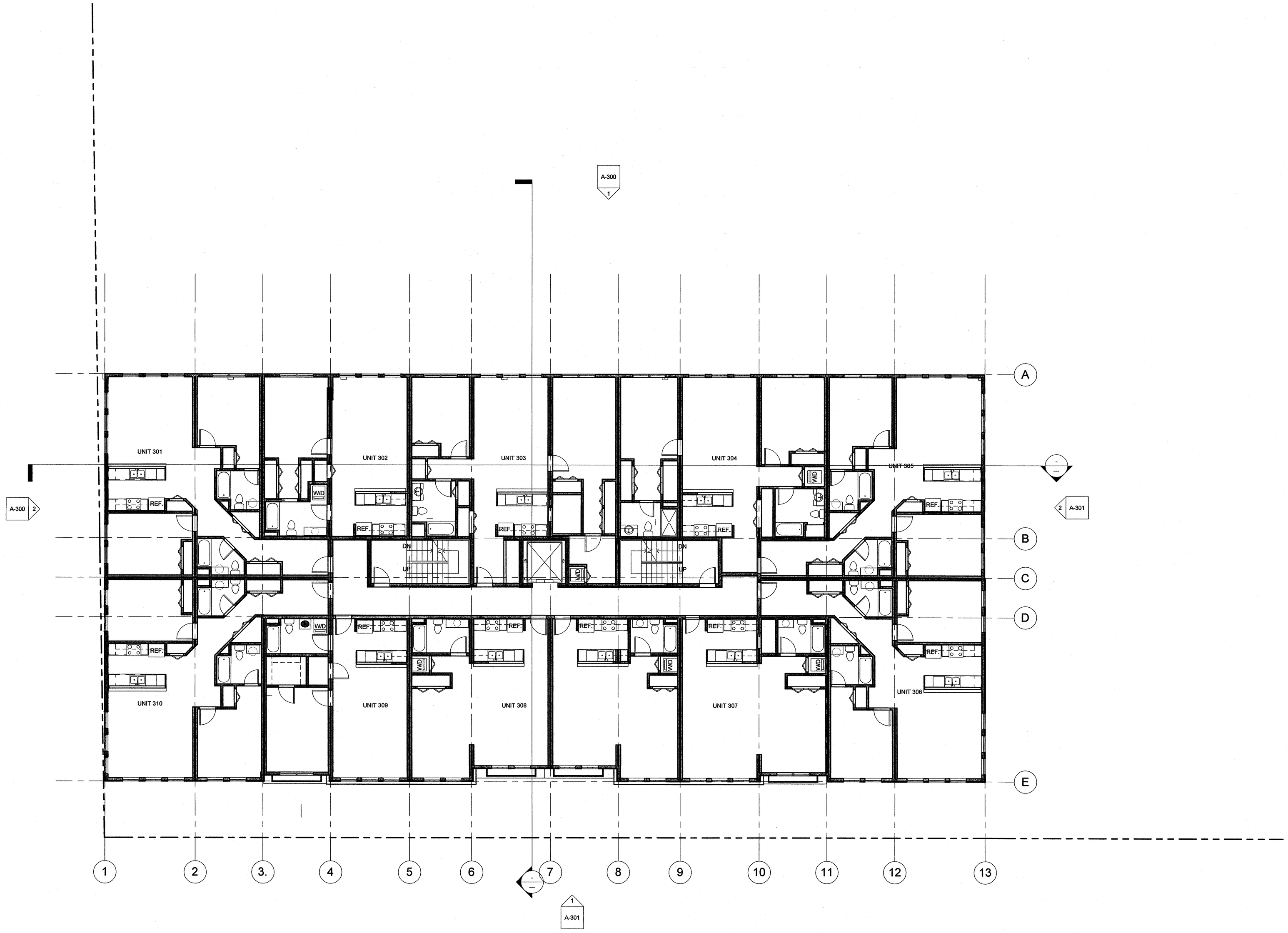

1 3rd Floor Level
1/8" = 1'-0"

PROJECT NAME
Summer Street Residences & Dilboy Post Building

PROJECT ADDRESS
351 Summer Street
Somerville MA 02143

CLIENT
Strategic Capital Group,LLC.

ARCHITECT
KHALSA DESIGN INC.

17 IVALOO STREET SUITE 400
SOMERVILLE, MA 02143
TELEPHONE: 617-591-8682 FAX: 617-591-2086

CONSULTANTS:

REGISTRATION

REGISTERED ARCHITECT
JAI SINGH KHALSA
No. 6042
CAMBRIDGE, MA.
COMMONWEALTH OF MASSACHUSETTS

Project number	07042
Date	02-04-2010
Drawn by	KK-SA
Checked by	JSK
Scale	1/8" = 1'-0"

REVISIONS

No.	Description	Date

3rd Floor Plan

A-103

Summer Street Residences & Dilboy Post Building

G:\07\07017-Dakota-Summer-St\ARCH\07017_SUMMER ST_02-02-2010.rvt

2/4/2010 5:50:41 PM

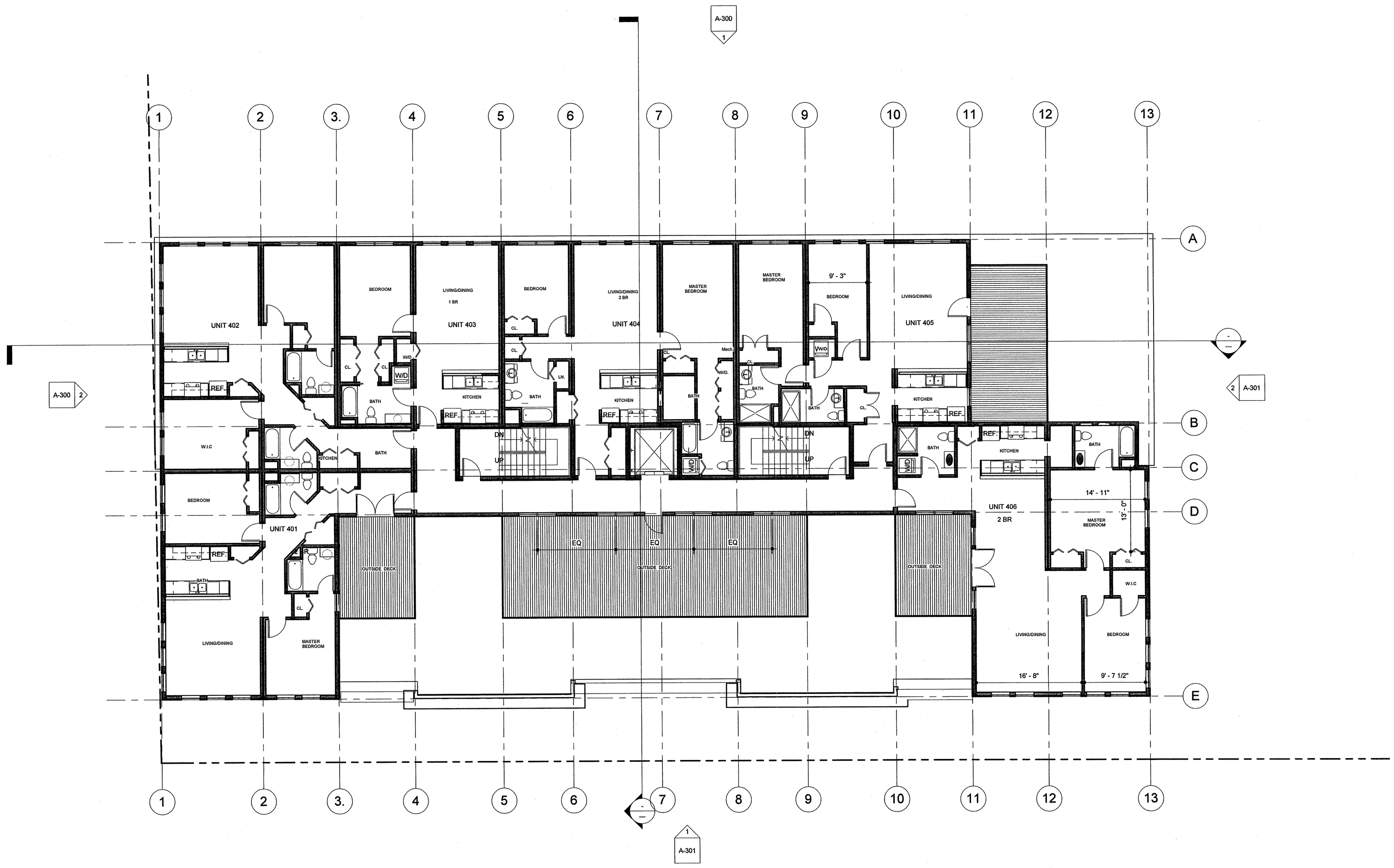

1 4th Floor Level
1/8" = 1'-0"

PROJECT NAME
Summer Street Residences & Dilboy Post Building

PROJECT ADDRESS
351 Summer Street
Somerville MA 02143

CLIENT
Strategic Capital Group,LLC.

ARCHITECT
KHALSA DESIGN INC.

17 IVALOO STREET SUITE 400
SOMERVILLE, MA 02143
TELEPHONE: 617-591-8682 FAX: 617-591-2086

CONSULTANTS:

REGISTRATION
REGISTERED ARCHITECT
JAI SINGH KHALSA
No. 6042
CAMBRIDGE, MA
COMMONWEALTH OF MASSACHUSETTS

Project number	07042
Date	02-04-2010
Drawn by	KK-SA
Checked by	JSK
Scale	1/8" = 1'-0"

REVISIONS

No.	Description	Date

4th Level Plan

A-104

Summer Street Residences & Dilboy Post Building

G:\07\07017-Dakota-Summer-SS\ARCH\07017_SUMMER ST_02-02-2010.rvt

2/4/2010 5:50:57 PM

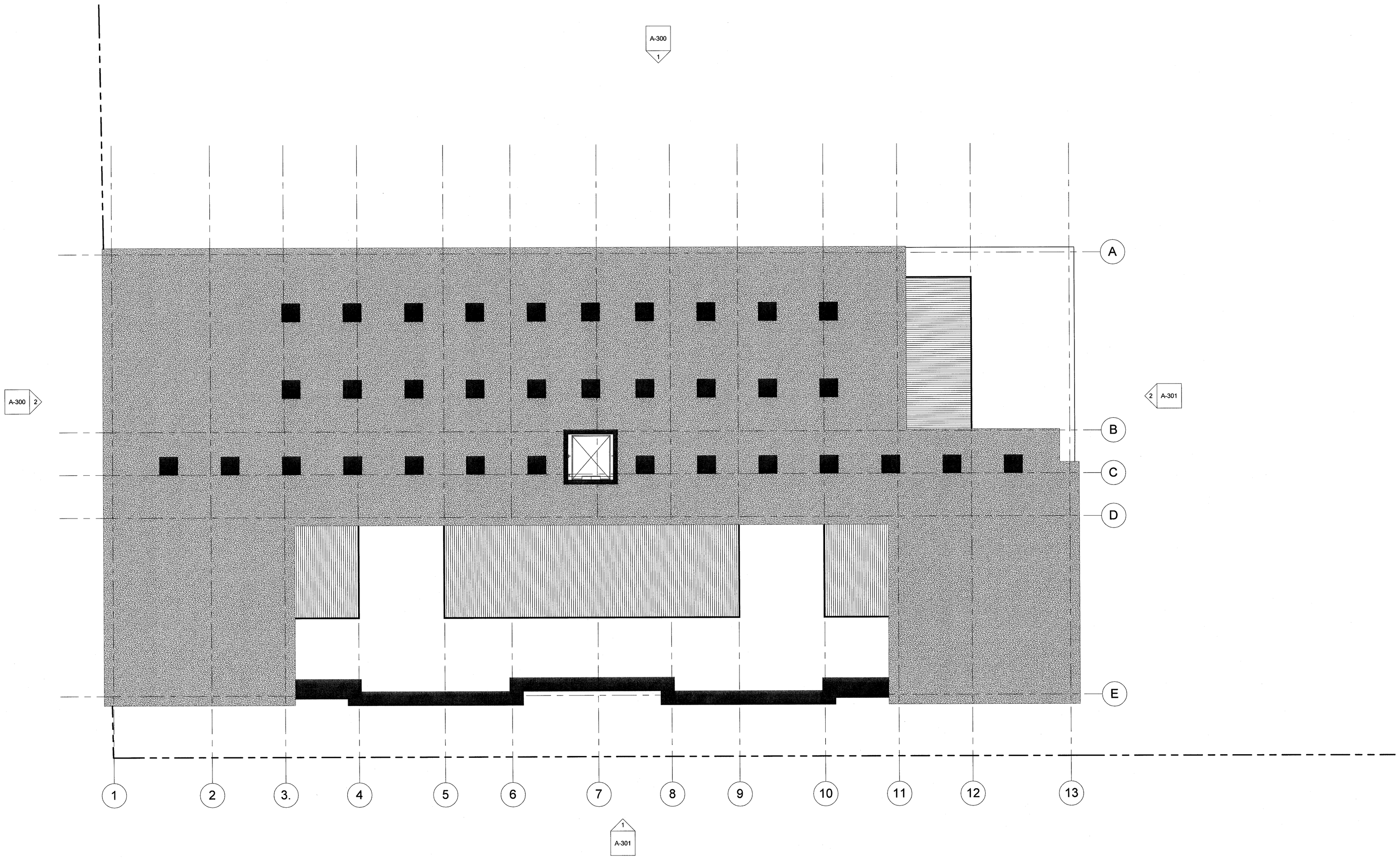

1 Roof Level
1/8" = 1'-0"

PROJECT NAME
Summer Street Residences & Dilboy Post Building

PROJECT ADDRESS
351 Summer Street
Somerville MA 02143

CLIENT
Strategic Capital Group,LLC.

ARCHITECT
KHALSA DESIGN INC.

17 IVALOO STREET SUITE 400
SOMERVILLE, MA 02143
TELEPHONE: 617-591-8682 FAX: 617-591-2086

CONSULTANTS:

REGISTRATION
REGISTERED ARCHITECT
JAI SINGH KHALSA
No. 6042
CAMBRIDGE, MA
COMMONWEALTH OF MASSACHUSETTS

Project number	07042
Date	02-04-2010
Drawn by	Author
Checked by	Checker
Scale	1/8" = 1'-0"

REVISIONS

No.	Description	Date

Roof Plan

A-105

Summer Street Residences & Dilboy Post Building

G:\07\07017-Dakota-Summer-St\ARCH\07017_SUMMER ST_02-02-2010.rvt

2/5/2010 12:16:54 PM

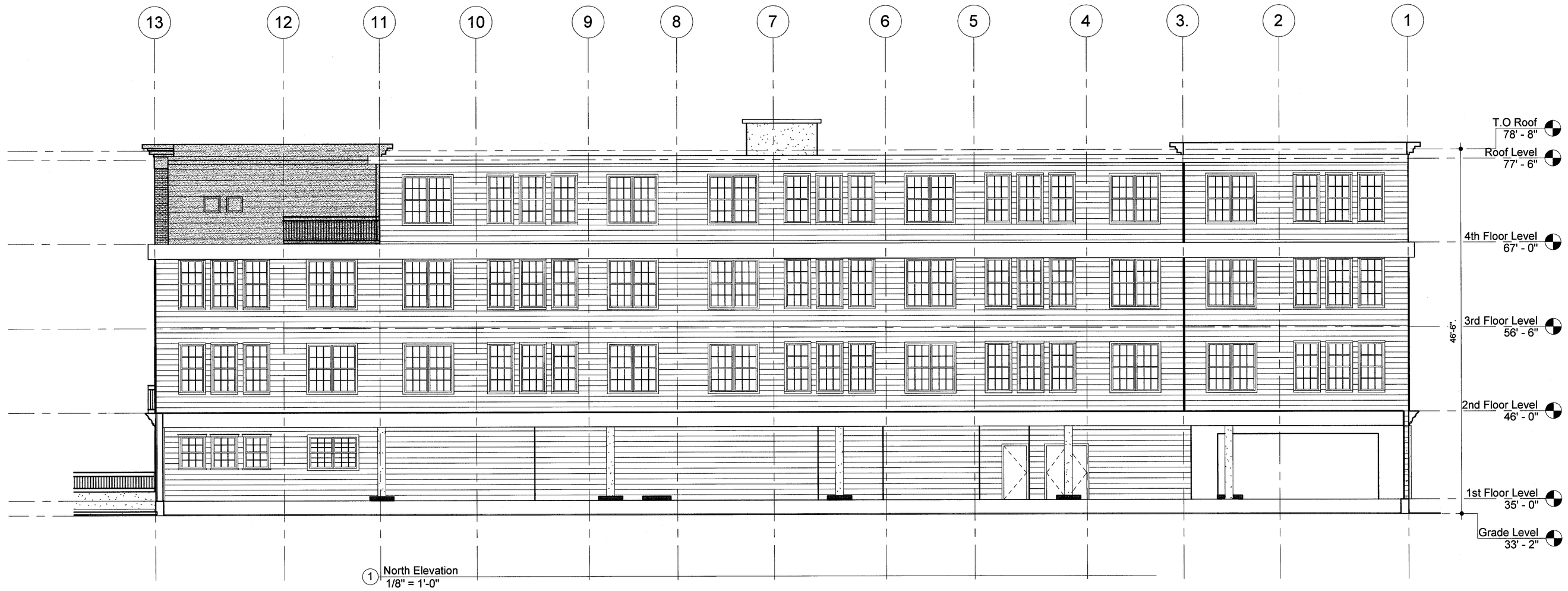

1 North Elevation
1/8" = 1'-0"

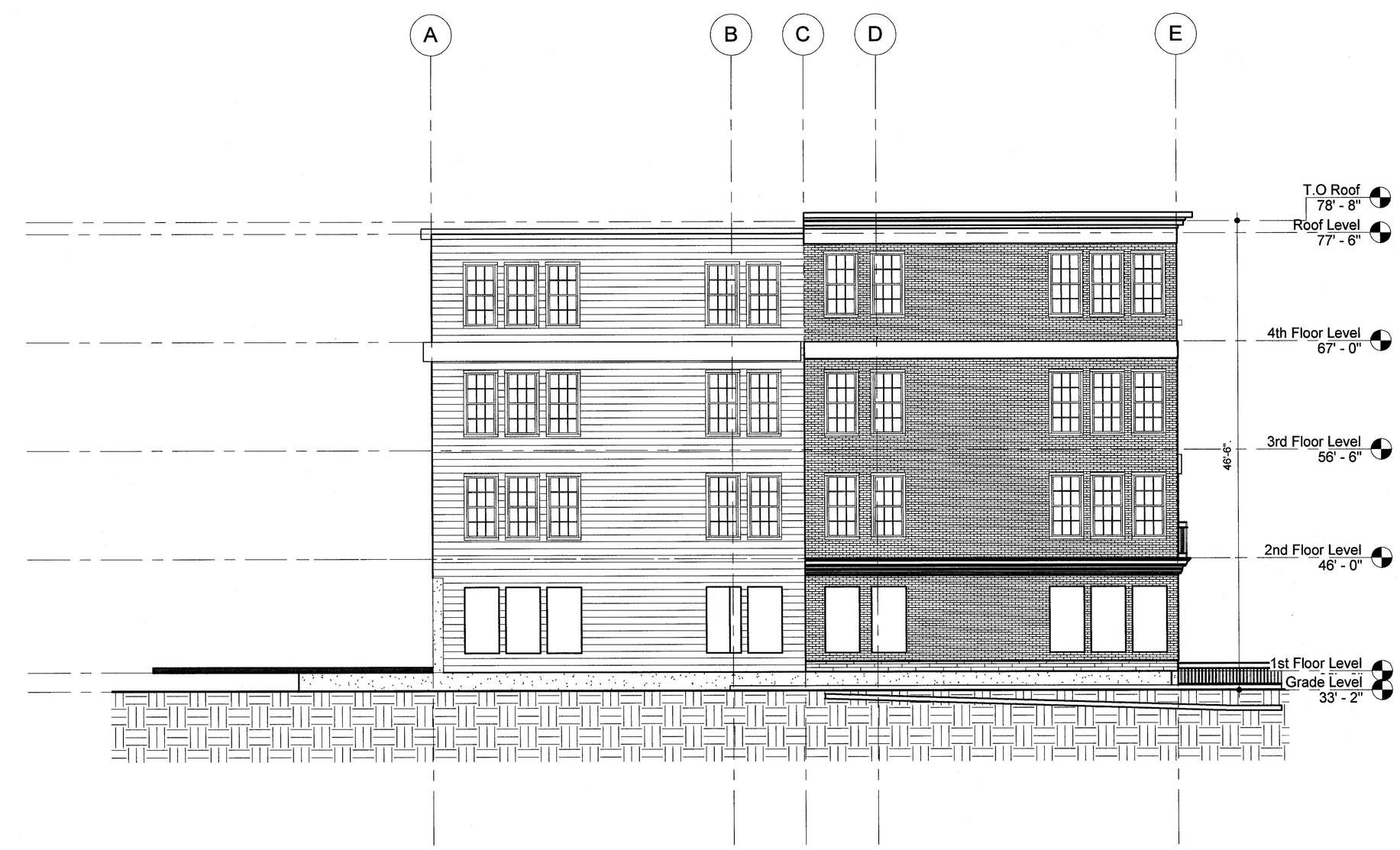

2 West Elevation
1/8" = 1'-0"

PROJECT NAME
Summer Street Residences & Dilboy Post Building

PROJECT ADDRESS
351 Summer Street
Somerville MA 02143

CLIENT
Strategic Capital Group,LLC.

ARCHITECT
KHALSA DESIGN INC.

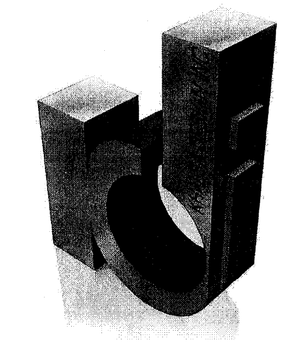

17 IVALOO STREET SUITE 400
SOMERVILLE, MA 02143
TELEPHONE: 617-591-8682 FAX: 617-591-2086

CONSULTANTS:

REGISTRATION

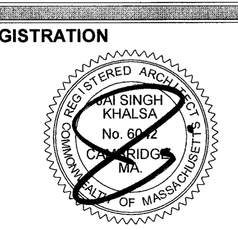

Project number	07042
Date	02-04-2010
Drawn by	KK-SA
Checked by	JSK
Scale	1/8" = 1'-0"

REVISIONS

No.	Description	Date

Elevations

A-300

Summer Street Residences & Dilboy Post Building

G:\07\07017-Dakota-Summer-St\ARCH\07017_SUMMER ST_02-02-2010.rvt

2/5/2010 12:14:14 PM

1 South Elevation
1/8" = 1'-0"

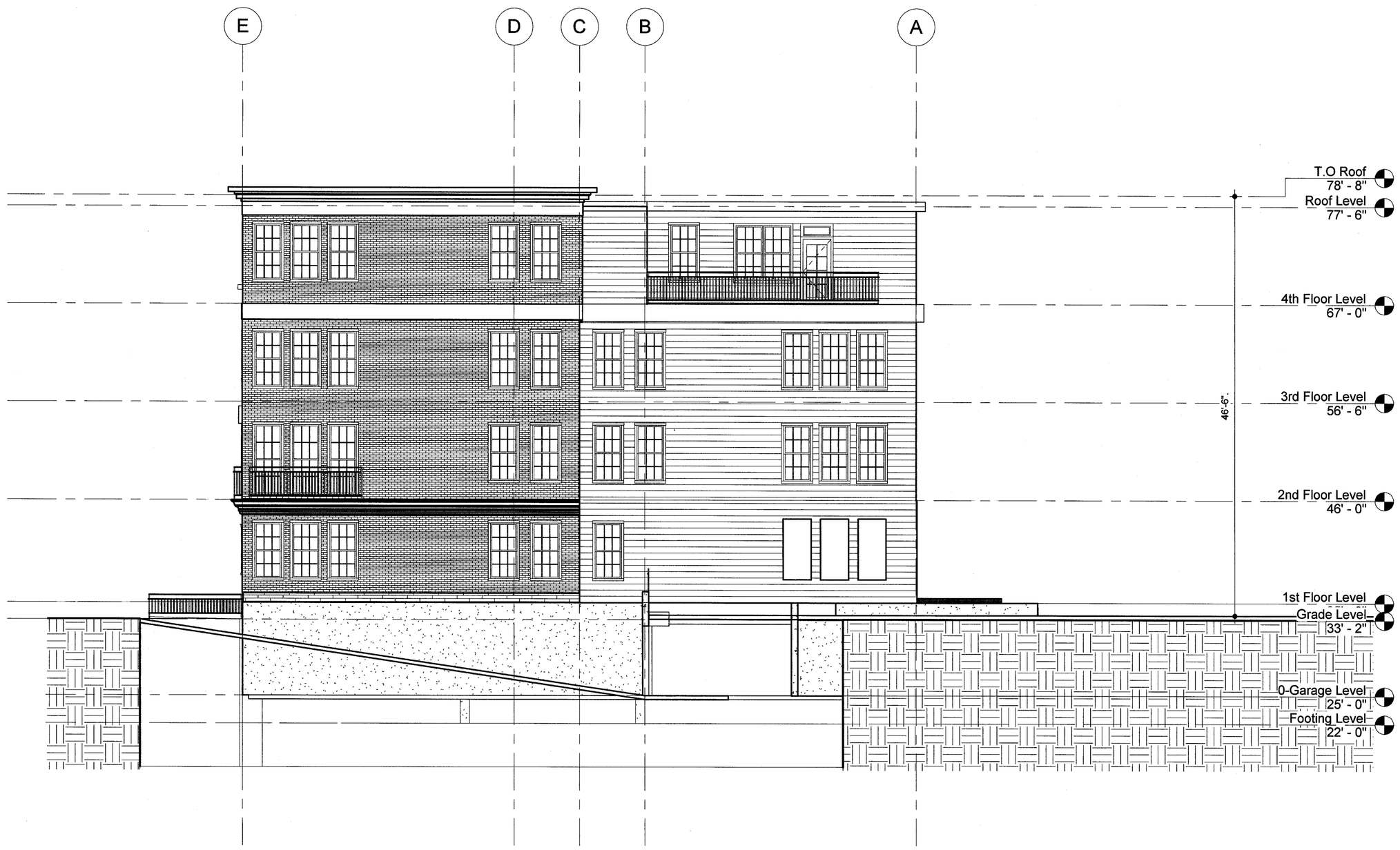

2 East Elevation
1/8" = 1'-0"

PROJECT NAME
Summer Street Residences & Dilboy Post Building

PROJECT ADDRESS
351 Summer Street
Somerville MA 02143

CLIENT
Strategic Capital Group,LLC.

ARCHITECT
KHALSA DESIGN INC.

17 IVALOO STREET SUITE 400
SOMERVILLE, MA 02143
TELEPHONE: 617-591-8682 FAX: 617-591-2086

CONSULTANTS:

REGISTRATION
REGISTERED ARCHITECT
JAI SINGH KHALSA
No. 6045
CAMBRIDGE, MA
COMMONWEALTH OF MASSACHUSETTS

Project number	07042
Date	02-04-2010
Drawn by	KK-SA
Checked by	JSK
Scale	1/8" = 1'-0"

REVISIONS

No.	Description	Date

South & East Elevations

A-301

Summer Street Residences & Dilboy Post Building

G:\07\07017-Dakota-Summer-St\ARCH\07017_SUMMER ST_02-02-2010.rvt

2/5/2010 12:15:53 PM

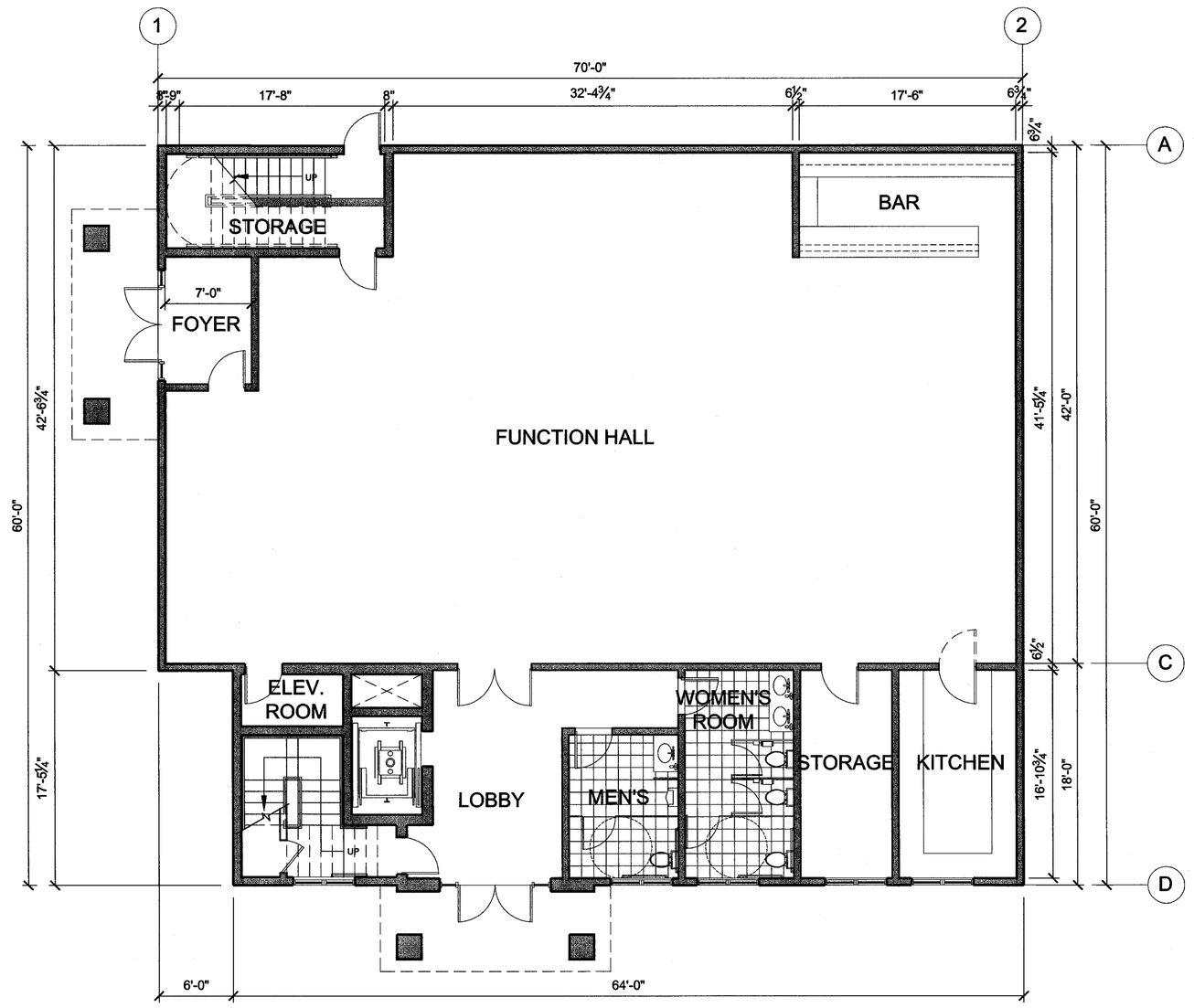

GROUND FLOOR PLAN

SCALE ⅛"= 1'-0"

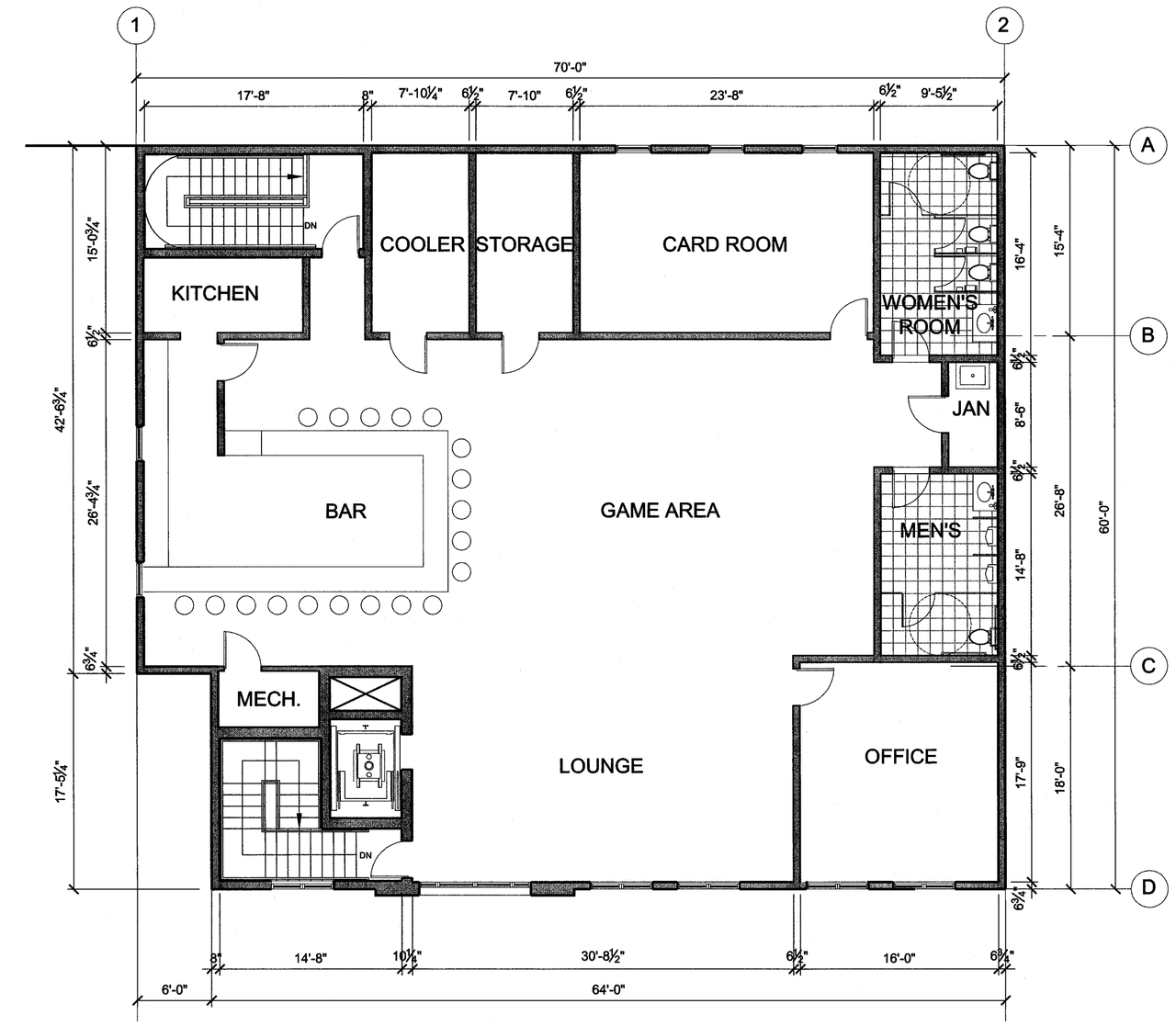

SECOND FLOOR PLAN

SCALE ⅛"= 1'-0"

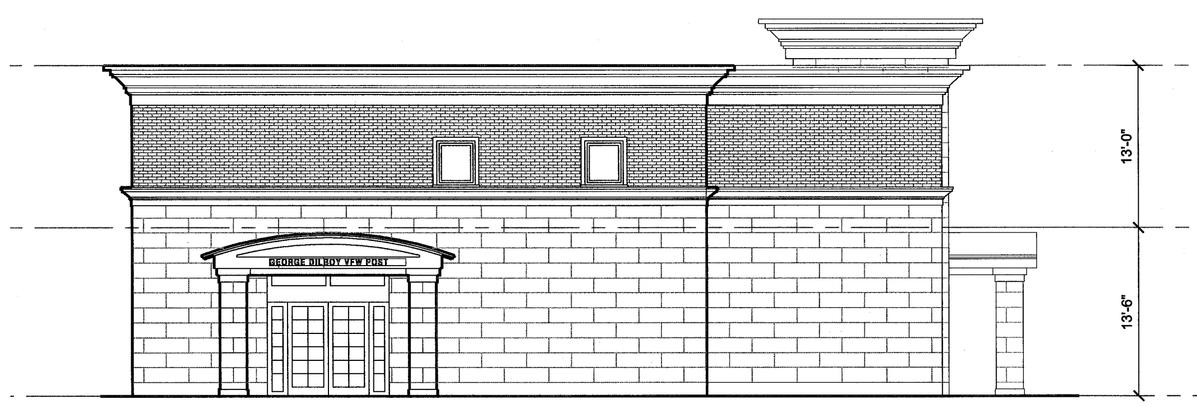

LEFT SIDE ELEVATION

SCALE ⅛"= 1'-0"

FRONT ELEVATION

SCALE ⅛"= 1'-0"

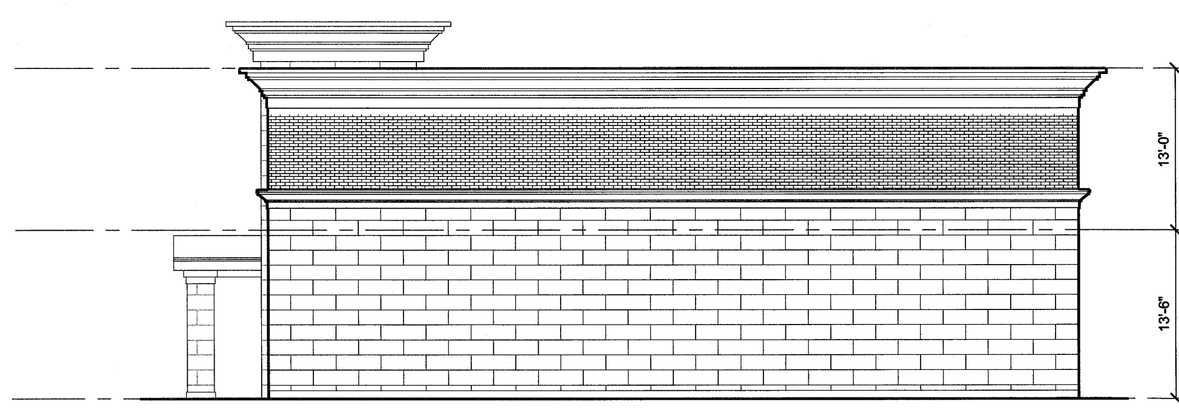

RIGHT SIDE ELEVATION

SCALE ⅛"= 1'-0"

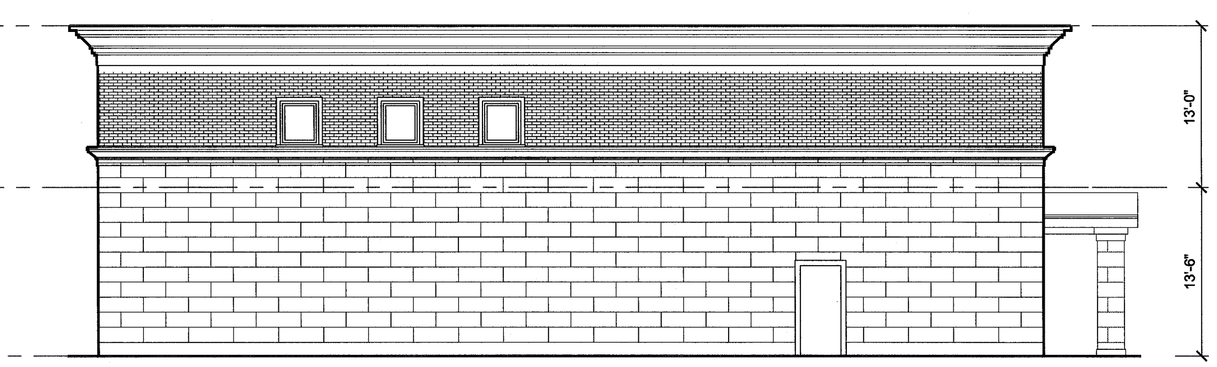

REAR ELEVATION

SCALE ⅛"= 1'-0"

PROJECT NAME

Summer Street Residences & Dilboy Post Building

PROJECT ADDRESS

351 Summer Street
Somerville MA 02143

CLIENT

Strategic Capital Group,LLC.

ARCHITECT

KHALSA DESIGN INC.

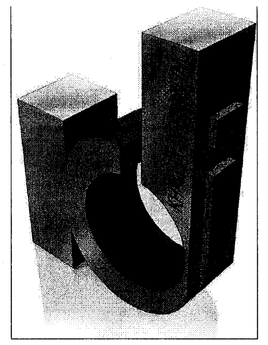

17 IVALOO STREET SUITE 400
SOMERVILLE, MA 02143
TELEPHONE: 617-591-8682 FAX: 617-591-2086

CONSULTANTS:

REGISTRATION

REGISTERED ARCHITECT
JAI SINGH KHALSA
No. 6041
CAMBRIDGE, MA.
COMMONWEALTH OF MASSACHUSETTS

Project number	07042
Date	11-24-09
Drawn by	KK-SA
Checked by	JSK
Scale	

REVISIONS

No.	Description	Date

DILBOY POST FLOOR PLANS & ELEVATIONS

A-302

Summer Street Residences & Dilboy

G:\07\07017-Dakota-Summer-St\ARCH\07017_SUMMER ST_11-08-09(Recovery).rvt

12/1/2009 10:05:03 AM

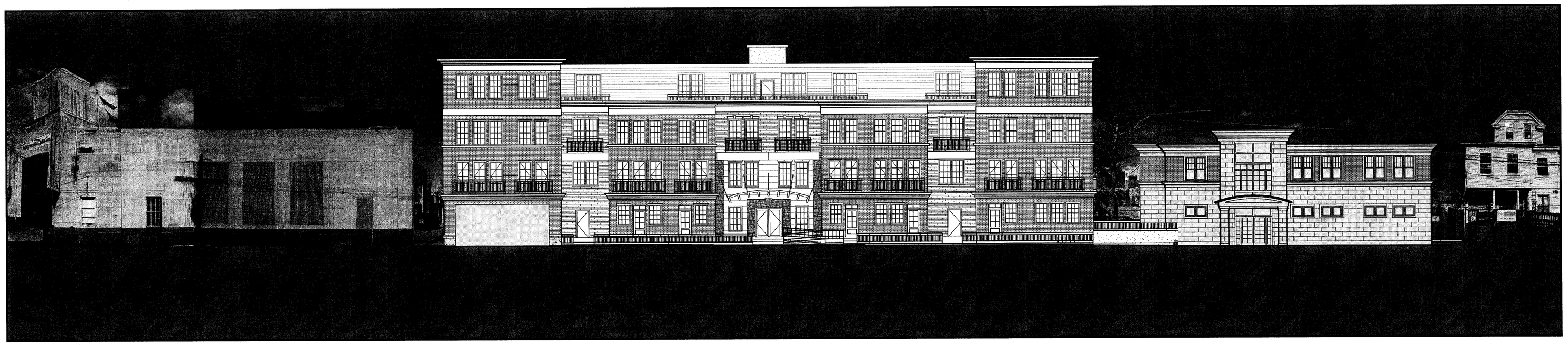

SUMMER STREET ELEVATION

PROJECT NAME
Summer Street Residences & Dilboy Post Building

PROJECT ADDRESS
351 Summer Street
Somerville MA 02143

CLIENT
Strategic Capital Group,LLC.

ARCHITECT
KHALSA DESIGN INC.

17 IVALOO STREET SUITE 400
SOMERVILLE, MA 02143
TELEPHONE: 617-591-8682 FAX: 617-591-2086

CONSULTANTS:

REGISTRATION

REGISTERED ARCHITECT
JAI SINGH KHALSA
No. 6042
CAMBRIDGE, MA.
COMMONWEALTH OF MASSACHUSETTS

Project number	07042
Date	11-24-09
Drawn by	KK-SA
Checked by	JSK
Scale	

REVISIONS

No.	Description	Date

SUMMER STREET ELEVATION

A-303

Summer Street Residences & Dilboy

G:\07\07017-Dakota-Summer-St\ARCH\07017_SUMMER ST_11-08-09(Recovery).rvt

12/1/2009 10:05:03 AM