IFB # 20-56

SOLICITATION FOR: Sidewalk Repairs

CITY OF SOMERVILLE, MASSACHUSETTS

Joseph A. Curtatone, Mayor

Purchasing Department

Angela M. Allen, Purchasing Director

RELEASE DATE: 02/12/2020

QUESTIONS DUE: 03/05/2020 **by 12PM EST**

DUE DATE AND TIME: 03/10/2020 **by 2PM EST**

PRE-BID MEETING DATE AND TIME: 03/04/2020 **at 9AM EST**

DELIVER TO:

City of Somerville

Purchasing Department

Attn: Prajkta Waditwar

Construction Procurement Manager

purchasing@somervillema.gov or pwaditwar@somervillema.gov

93 Highland Avenue

Somerville, MA 02143

IFB # 20-56
Sidewalk Repairs

Key Project Information

Project Address	Various locations in the City
Estimated Construction Cost	$75,000.00
Anticipated Contract Award	03/12/2020
Date of Substantial Completion	05/31/2020
Date of Final Completion	12/31/2020
Est. Contract Commencement Date	03/16/2020
Est. Contract Completion Date	06/30/2020
Governing Bid Law	**MGL 30.39M (Horizontal Construction)**
Wage Requirements	**State Prevailing Wages**
Payment Bond Requirements	**50% of Contract Value**
Performance Bond Requirements	**N/A**

Managing Department Information

Managing City Department	Department of Public Works
Project Manager	Mark Lawhorne
Project Manager Email	mlawhorne@somervillema.gov

TABLE OF CONTENTS

• Part 1: Invitation for Bid Documents

Section 1: GENERAL INFORMATION ON BID PROCESS

1.1	General Instructions
1.2	Bid Schedule
1.3	Submission Instructions
1.4	Questions
1.5	General Terms

Section 2: RULE FOR AWARD, QUALITY REQUIREMENTS, AND PROJECT BACKGROUND

2.1	Rule For Award
2.2	Project Background
2.3	Minimum Quality Requirements

Section 3: REQUIRE BID FORMS / BIDDERS' CHECKLIST

3.1 (***required with bid***)	Signed Cover Letter
	Somerville Living Wage Form
	Quality Requirements Form (Section 2.0)
	Certificate of Non-Collusion & Tax Compliance
	Certificate of Signature Authority
	Reference Form (or equivalent may be attached)
	5% Bid Deposit
	Prevailing Wages, Statement of Compliance Form
	OSHA Form
	Vulnerable Road Users Ordinance
	Acknowledgement of Addenda (if applicable)
	Signed W9
3.2 (***required post bid***)	Certificate of Good Standing (will be required of awarded Vendor; please furnish with bid if available)
	Insurance Specifications (will be required of awarded Vendor; furnish sample certificate with bid, if possible)
	Statement of Management (if applicable)
	Payment Bond (50% of the contract value)

Section 4: BID PRICING

4.0	Form for General Bid
	Unit Price Form (if applicable)

• PART 2: SAMPLE CONSTRUCTION CONTRACT / CITY's GENERAL TERMS AND CONDITIONS

• PART 3: TECHNICAL SPECIFICATIONS

Part 1: Invitation for Bid Documents

IFB # 20-56
Sidewalk Repairs

1.1 General Instructions

Copies of the solicitation may be obtained from the Purchasing Department on and after 02/12/2020 per the below-noted City Hall hours of operation.

Hall Hours of Operation:	
Monday – Wednesday	8:30 a.m. and 4:30 p.m.
Thursday	8:30 a.m. to **7:30** p.m.
Friday	8:30 a.m. to **12:30** p.m.

All Responses Must be Sealed and Delivered To:
Purchasing Department City of Somerville 93 Highland Avenue Somerville, MA 02143
It is the sole responsibility of the Offeror to ensure that the bid arrives on time at the designated place. Late bids will not be considered and will be rejected and returned.
Bid Format:
Submit one, original (1) sealed bid package; it must be marked with the solicitation title and number.
BIDS SUBMITTED MUST BE AN ORIGINAL. **The completion of the following forms is necessary for consideration of a potential contract award. When submitting bid documents, please retain the order of documents as provided below:** 1) Form for General Bid 2) Bid Form for Alternates (if applicable) 3) Unit Price Form 4) Somerville Living Wage Form 5) Quality Requirements Form 6) Certificate of Non-Collusion & Tax Compliance 7) Certificate of Signature Authority 8) Reference Form 9) 5% Bid Deposit 10) Prevailing / Davis Bacon Wages Statement of Compliance Form 11) OSHA Form
If all required documents are not present, the bid may be deemed non-responsive and may result in disqualification of the bid unless the City determines that such failure(s) constitute(s) a minor informality, as defined in Chapter MGL 30B.
A complete Bid must also include a cover letter signed by an official authorized to bind the Offeror contractually and contain a statement that the proposal is firm for ninety (90) days. **An unsigned letter, or one signed by an individual not authorized to bind the Offeror, may be disqualified.**
The Offeror's authorized official(s) must sign all required bid forms.

1.2 Bid Schedule

Key dates for this Invitation for Bids:	
IFB Issued	02/12/2020
Deadline for Submitting Questions to IFB	03/05/2020 by **12PM EST**
Pre-Bid Conference	03/04/2020 by 9:00AM EST at Committee Room, Somerville City Hall.
Bids Due	03/10/2020 **by 2PM EST**
Anticipated Contract Award	03/12/2020
Est. Contract Commencement Date	03/16/2020
Est. Contract Completion Date	06/30/2020

Responses must be delivered by 03/10/2020 by 2PM EST to:	City of Somerville Purchasing Department Attn: Prajkta Waditwar 93 Highland Avenue Somerville, MA 02143

1.3 Submission Instructions

Please submit ***one sealed bid package*** with the following contents and marked in the following manner:

Contents of Sealed Bid Package	**Marked As**
Envelope 1: Sealed Bid: Shall Include (1) original and one (1) electronic copy. [Electronic copies are to be submitted on CD-ROM or thumb drives and are to be saved in Adobe Acrobat format. ("Read only" files are acceptable.)]	**To Be Marked:** IFB # 20-56 Sidewalk Repairs
Please send the complete sealed package to the attention of :	Prajkta Waditwar Construction Procurement Manager Purchasing Department Somerville City Hall 93 Highland Avenue Somerville, MA 02143

Bid Format

Responses shall be prepared on standard 8.5 x 11 inch paper (charts may be landscaped but must be on 8.5 x 11 inch paper) and shall be in a legible font size (12). All pages of each response shall be appropriately numbered (and with consecutive page numbering across tabs). **In an effort to reduce waste, please DO NOT USE 3-RING BINDERS.**

Elaborate format and binding are neither necessary nor desirable.

Qualifications & Experience
The Offeror may include any additional literature and product brochures. The Quality Requirements Form (Section 2), or set of basic business standards, must be submitted with bid.

References
The Offeror shall list at least three relevant references, which the City may contact. The City of Somerville reserves the right to use ourselves as a reference. References shall include the following information:

●The name, address, telephone number, and email address of each client listed above.	
●A description of the work performed under each contract.	●The amount of the contract.
●A description of the nature of the relationship between Offeror and the customer.	
●The dates of performance.	●The volume of the work performed.

1.4 Questions

Questions are due: 03/05/2020 **by 12PM EST**

Questions concerning this solicitation must be delivered in writing to:

Prajkta Waditwar
Construction Procurement Manager
Somerville City Hall
Purchasing Department
93 Highland Avenue
Somerville, MA 02143
Or emailed to:
purchasing@somervillema.gov or pwaditwar@somervillema.gov
Or faxed to:
617-625-1344

Answers will be sent via an addendum to all Offerors who have registered as bid holders. Bidders are encouraged to contact the Purchasing Department to register as a bid document holder to automatically be alerted as to addenda as they are issued. It is the responsibility of the Offeror to also monitor the bid portal on the City's website for any updates, addenda, etc. regarding that specific solicitation. The web address is:

http://www.somervillema.gov/departments/finance/purchasing/bids.

Any bidders that contact City personnel outside of the Purchasing Department regarding this bid may be disqualified.

1.5 Pre-Bid Conference

An optional pre-bid conference will be conducted on **03/04/2020 beginning at 9AM EST**. Interested parties are instructed to meet at the Committee Room, Somerville City Hall, 93 Highland Avenue, Somerville, MA 02143 prior to 9AM. The conference will allow interested parties to ask questions regarding the overall project. Interested parties are asked to register their interest in attending the pre-bid conference by contacting purchasing@somervillema.gov or pwaditwar@somervillema.gov

1.6 General Terms

Estimated Quantities

The City of Somerville has provided estimated quantities, which will be ordered/purchased over the course of the contract period. These estimates are estimates only and not guaranteed.

Bid Signature

A response must be signed as follows: 1) if the Offeror is an individual, by her/him personally; 2) if the Offeror is a partnership, by the name of the partnership, followed by the signature of each general partner; and 3) if the Offeror is a corporation, by the authorized officer, whose signature must be attested to by the clerk/secretary of the corporation (& with corporate seal).

Time for Bid Acceptance and City Contract Requirements

The contract will be awarded within 90 days after the bid opening. The time for award may be extended for up to 45 additional days by mutual agreement between the City of Somerville and the Offeror that is most advantageous and responsible. The Offeror's submission will remain in effect for a period of 90 days from the response deadline or until it is formally withdrawn, a contract is executed, or this solicitation is canceled, whichever occurs first. The Offeror will be required to sign a standard City contract per the City's general terms included herein as Appendix A.

Holidays are as follows:

New Year's Day	Martin Luther King Day	Presidents' Day	Patriots' Day
Memorial Day	Bunker Hill Day	Independence Day	Labor Day
Columbus Day	Veterans' Day	Thanksgiving Day	Thanksgiving Friday
Christmas Eve (half day)	Christmas Day		

Please visit http://www.somervillema.gov/ for the City's most recent calendar. *Under State Law, all holidays falling on Sunday must be observed on Monday.

If the awarded Offeror for their convenience desires to perform work during other than normal working hours or on other than normal work days, or if the Offeror is required to perform work at such times, the Offeror shall reimburse the City for any additional expense occasioned the City, thereby, such as, but not limited to, overtime pay for City employees, utilities service, etc. UNLESS otherwise specified in these provisions, services will be performed during normal work hours. When required services occur on holidays, work will be performed on either the previous or following work day, unless specified otherwise.

Unforeseen Office Closure

If, at the time of the scheduled bid opening, the Purchasing Department is closed due to uncontrolled events such as fire, snow, ice, wind, or building evacuation, the bid due date will be postponed until 2:00 p.m. on the next normal business day. Bids will be accepted until that date and time. In the event of inclement weather, the Offeror is responsible for listening to the media to determine if the City has been closed due to weather.

Changes & Addenda

If any changes are made to this solicitation, an addendum will be issued. All proposers on record as having picked up the solicitation will be alerted via email as to the posting of all addenda. The City will also post addenda on its website (http://www.somervillema.gov/departments/finance/purchasing/bids). No changes may be made to the solicitation documents by the Offerors without written authorization and/or an addendum from the Purchasing Department.

Modification or Withdrawal of Bids, Mistakes, and Minor Informalities

An Offeror may correct, modify, or withdraw a bid by written notice received by the City of Somerville prior to the time and date set for the bid opening. Bid modifications must be submitted in a sealed envelope clearly labeled "Modification No.__" to the address listed in Section 1. Each modification must be numbered in sequence and must reference the

original solicitation. After the bid opening, an Offeror may not change any provision of the bid in a manner prejudicial to the interests of the City or fair competition. Minor informalities will be waived or the proposer will be allowed to correct them. If a mistake and the intended bid are clearly evident on the face of the bid document, the mistake will be corrected to reflect the intended correct bid, and the proposer will be notified in writing; the proposer may not withdraw the bid. A proposer may withdraw a bid if a mistake is clearly evident on the face of the bid document, but the intended correct bid is not similarly evident.

Right to Cancel/Reject Bids

The City of Somerville may cancel this solicitation, or reject in whole or in part any and all bids, if the City determines that cancellation or rejection serves the best interests of the City.

Unbalanced Bids

The City reserves the right to reject unbalanced, front-loaded, and conditional bids.

Brand Name "or Equal"

Any references to any brand name or proprietary product in the specifications shall require the acceptance of an equal or better brand. The City has the right to make the final determination as to whether an alternate brand is equal to the brand specified.

Electronic Funds Transfer (EFT)

For EFT payment, the following shall be included with invoices to the point of contact:

- Contract/Order number; Contractor's name & address as stated in the contract;
- The signature (manual or electronic, as appropriate) title, and telephone number of the Offeror's representative authorized to provide sensitive information;
- Name of financial institution; Financial institution nine (9) digit routing transit number;
- Offeror's account number; Type of account, i.e., checking or saving.

Project Schedule

Bidders are instructed to note the firmness of the dates of: Substantial Completion, and Final Completion. For the purpose of meeting these deadlines, the City may be prepared to authorize extended work hours beyond those prescribed by City ordinance, to include work on Sundays with the prior permission of the City.

Contractor submission of all paperwork required for the Construction Contract, including but not limited to insurance certificates, performance and payment bonds, a certificate of good standing from the Secretary of Corporations, and signature pages shall be submitted to the Purchasing Director no later than 5 working days from award of the contract.

The successful bidder shall be required to submit a preliminary construction schedule within 10 days of the established date of award of the Contract and a more detailed Gantt-type construction schedule within 15 days of the established award of the contract, which shows the dates of substantial and final completion.

Sales Tax Exemption

Materials, equipment, and supplies for this project are exempt from sales tax in accordance with M.G.L. Chapter 64H, Section 6 (d). The city will furnish the successful bidder with its sales tax exemption number.

Permit Fees **(Contractor responsible obtaining permits/City of Somerville permit fees waived)**

DPW permits to obstruct or excavate the public streets and/or sidewalks; ISD building code permits; and Traffic and Parking permits; are waived by the City of Somerville. However, license fees are not waived by the City of Somerville. The Contractor shall pay all license fees (e.g., drain layer's license fee). The City of Somerville Traffic and Parking Department must be contacted directly for all required permits. The vendor must also provide the City of Somerville Traffic and Parking Department with a traffic management plan, prior to the start of all work.

If water usage is required in the commitment of this project, the Contractor needs to contact the DPW Water Dept., and make arrangements for a water meter. There will be a charge for the water meter and the water usage.

The Contractor is responsible for obtaining EVERSOURCE work orders and for all costs and fees associated with EVERSOURCE.

Permits to excavate the public way cannot be issued until the applicant has notified the appropriate utility companies, as required by Massachusetts General Laws, Chapter 370 of the Acts of 1963. The applicant must either: 1) obtain written receipts from the affected utilities, and provide copies of same to the owner; or 2) utilize the Dig-Safe System for the required notifications, and also submit written notifications for those utilities not participating in the Dig-Safe System. Written notifications must state that utility companies have been notified and the contractor cleared to begin work.

The following utility companies must be notified in writing:		
M.B.T.A. Engineering and Maintenance Division **617-722-5454** Attn: Chief Engineer 500 Arborway Jamaica Plain, MA 02130	**M.W.R.A. Sewer Division** **617-242-6000** 100 First Avenue Charlestown Navy Yard Boston, MA 02129	**M.W.R.A. Water Division** **617-242-6000** 100 First Avenue Charlestown Navy Yard Boston, MA 02129
The following utility companies must be notified in writing or through Dig-Safe:		
Algonquin Gas Transmission Corp. **617-254-4050** Manager of Land and Public Relations 1284 Soldiers Field Road Brighton, MA 02135	**Verizon** **781-290-5154** 460 Totten Pond Road Waltham, MA 02154	**Boston Edison** **617-541-5730** Right of Way 1165 Massachusetts Avenue Dorchester, MA 02125
Boston Gas Company **617-323-9210** 201 Rivermoor Street West Roxbury, MA 02132	**EVERSOURCE** **617-497-1236, x4195** 46 Blackstone Street Somerville, MA 02139	**EVERSOURCE Steam** **617-225-4568** Attn: Supervisor of Maintenance 265 First Street Somerville, MA 02142
EVERSOURCE Gas **617-369-5591** 303 Third Street Somerville, MA 02142	**A T & T Broadband** **981-658-0400** 760 Main Street Malden, MA 01887	**Somerville Public Works Dept.** **617-625-6600, x5200** One Franey Road Somerville, MA 02145
Somerville Fire Department **617-625-6600, x8100** 266 Broadway Somerville, MA 02143	**Dig-Safe** **1-800-322-4844**	

The contractor shall have all utilities marked out along the course of this work by such means as the Engineer shall approve and shall preserve such marked locations until the work has progressed to the point where the encountered utility is fully exposed and protected as required. It shall be the contractor's responsibility to notify utilities at least 48 hours prior to the start of any excavation.

The contractor is responsible for contacting any other utilities that are not listed herein.

Schedule of Values

Bidders do NOT need to include a Schedule of Values with their bid package. The successful bidder will be required to submit a refined and detailed schedule of values for review and approval by the design professional prior to signing the construction contract.

5% Bid Guaranty

All bids shall be accompanied by a bid bond or bank certified check or bank treasurer's check in the amount of 5% of the bid price, which shall become the property of the City of Somerville if the bid is accepted and the bidder neglects or refuses to comply with the terms of the bid.

Prevailing Wage Rate Requirements

The contractor shall pay Mass. Prevailing Wage Rates. The applicable prevailing wage rates are attached as part of this bid package and will be included in the resulting contract. Notwithstanding anything to the contrary, the City may, in its sole discretion withhold payment unless the City has in its possession payroll records that are complete, accurate, and current as of the date of said application for payment. A signed Compliance Form must be included with the bid package (form included).

a) **The Contractor shall:**
   - Pay wages at least once a week;
   - Submit payroll information on a weekly basis in a format approved by the City, numbered in numerical sequence and signed by the Contractor (including forms for weeks when the Contractor is not on the Project Site, in which case there shall be a notation to the effect "no work this payroll period" and a date anticipated for resuming work).

b) **The Contractor shall submit to the City within the first week of construction:**
   - A list of apprenticeship programs with which the Contractor is affiliated;
   - The number of apprentices that will be employed by the Contractor on the Project;
   - A list of the Contractor's employee fringe benefits;
   - A copy of each project schedule, including the anticipated commencement date for each Subcontractor; and
   - A list of each Subcontractor's suppliers and material men.

c) **The Contractor shall include language similar to the above in all subcontracts.**

Reservation of Rights

The City reserves the right to extend the deadline for submission of bids, to waive minor informalities, and to reject any and all bids, if in its sole judgment, the best interests of the City of Somerville would be served by doing so.

Maintenance Manual and As-Built Drawing Requirements

Upon Final Completion of all park construction, the contractor shall submit: two complete copies of a park maintenance manual, and two copies of an as-built drawing set, with two compact disc (CD) copies of the as-built drawings. The City will not issue the final check for park retainage until the submittal and approval of the maintenance manual and as-built drawings.

1) The Maintenance Manual shall be in the form of a three ring binder, organized and tabbed into appropriate sections, and shall include the following items:
   - A complete maintenance plan with recommended maintenance schedules and procedures for all systems including: HVAC, security (card access/cameras), fire suppression, irrigation, fertilization, and water systems shut-down procedures, etc., and all other applicable systems and procedures;
   - A letter from the contractor stating the period of warranty for all parts, materials, and workmanship, from the date of Final Completion;

- A letter from the contractor stating the period of warranty for all systems (HVAC, irrigation, fire suppression, etc.);
- All product information, product directions, and warranties;
- List of all materials (plants, etc.),sizes of plant containers, etc.;
- Copies of City permits with signatures of inspectors;
- Contact information for all subcontractors including email addresses; and,
- A record of all submittals and dates of approvals.

2) As-Built drawings shall be a complete and accurate record that incorporates any and all changes to the construction plan set issued at the time of contract initiation. As-built drawings shall be clearly marked and annotated and shall include but not be limited to: all field changes, change orders, and supplemental drawing provided by the landscape architect.

3) The Compact Discs shall include an electronic copy of all as-built drawings.

Police Details

Unless otherwise noted in the specifications, the Contractor will be responsible for requesting and paying for all necessary police details. These costs should be incorporated into the base bid amount. If use of the public way is required for staging, parking or deliveries, the Contractor is responsible for obtaining a Street Occupancy Permit, including a Traffic Management Plan (TMP) and for the cost of all police details.

Period of Performance

The period of performance for this contract begins on or about 03/16/2020 and ends on or about 06/30/2020. If applicable, optional renewal years may be exercised by the sole discretion of the City (see cover page for anticipated contract term).

Place of Performance

All services, delivery, and other required support shall be conducted in Somerville and other locations designated by the Department point of contact. Meetings between the Vendor and City personnel shall be held at the City of Somerville, Massachusetts, unless otherwise specified.

Vendor Conduct

The Vendor's employees shall comply with all City regulations, policies, and procedures. The Vendor shall ensure that their employees present professional work attire at all times. The authorized contracting body of the City may, at his/her sole discretion, direct the Vendor to remove any Vendor employee from City facilities for misconduct or safety reasons. Such rule does not relieve the Vendor of their responsibility to provide sufficient and timely service. The City will provide the Vendor with immediate written notice for the removal of the employee. Vendors must be knowledgeable of the conflict of interest law found on the Commonwealth's website http://www.mass.gov/ethics/laws-and-regulations-/conflict-of-interest-information/conflict-of-interest-law.html. Vendors may be required to take the Conflict of Interest exam.

Vendor Personnel

The Vendor shall clearly state the name of the proposed project manager. All proposed staff must demonstrate the ability to carry out the specified requirements.

Confidentiality

The Vendor agrees that it will ensure that its employees and others performing services under this contract will not use or disclose any non-public information unless authorized by the City. That includes confidential reports, information, discussions, procedures, and any other data that are collected, generated or resulting from the performance of this scope of work. All documents, photocopies, computer data, and any other information of any kind collected or received by the Vendor in connection with the contract work shall be provided to the City upon request at the termination of the contract (i.e., the date on which final payment is made on the contract or at such other time as may be requested by the City or as otherwise agreed by City and the Vendor). The Vendor may not discuss the contract work in progress with any outside party, including responding to media and press inquiries, without the prior written permission of the City. In addition, the Vendor may not issue news releases or similar items regarding contract award, any subsequent contract modifications, or

any other contract-related matter without the prior written approval of the City. Requests to make such disclosures should be addressed in writing to the Vendor's point of contact.

IFB # 20-56

SECTION 2.0
RULE FOR AWARD / PROJECT INFORMATION

2.1 Rule For Award

The contract shall be awarded to the responsible and eligible Bidder submitting the lowest total price.
This project will be completed in 2 phases. Phase 1 of this project will be completed by 06/30/2020. Phase 2 of this project will be subjected to budget approval.
The contract will be awarded within ninety (90) days after the bid opening. The time for award may be extended for up to 45 additional days by mutual agreement between the City and the apparent lowest responsive and responsible bidder.

2.2 Background

Project Information	
Managing City Department:	Department of Public Works
Project Manager:	Mark Lawhorne
Project Manager Email:	mlawhorne@somervillema.gov
Project Address:	Various locations in the City
Brief Project Description:	Labor, material and equipment for the sidewalk repairs of the City.
Estimated Project Cost:	$75,000.00
Project Schedule	
Estimated Award Date:	03/12/2020
Estimated Start Date:	03/16/2020
Date of Substantial Completion:	05/31/2020
Date of Final Completion:	12/31/2020

2.3 Minimum Quality Requirements

Quality requirements, or basic business requirements, are the minimum set of standards that an entity must meet and certify to be considered responsible and responsive. **Please complete the Quality Requirements form, below, and submit it with your completed bid.** The City of Somerville will disqualify any response that does not meet the minimum quality requirements. A "No" response to items 1 through 7 or a failure to respond to any of the following minimum standards, will result in disqualification of your bid.

QUALITY REQUIREMENTS		YES	NO
1.	Are you established in the field of sidewalk repairs, or general construction for at least five (5) years?		
2.	Will you be able to respond to a work request, from the Commissioner of Public Works or an authorized agent, within 48 hours?		
3.	Can you provide all necessary equipment to perform any required repairs?		
4.	Have you installed ADA accessible ramps that adhere to attached standards documentation?		
5.	Can you provide minimum 3 references for similar size work performed by your company?		
6.	Can you provide the successful completion certificate of at least 10 hours of OSHA approved training in Construction Safety and Health?		
7.	Do you comply with all Federal, State and Local Ordinances and Regulations governing the type of work indicated in these specifications?		
8.	Optional: Are you a Mass. Supplier Diversity Office MBE/WBE certified minority or woman owned business? Additional minority designations may be submitted by attaching supporting documentation.		

In order to provide verification of affirmative responses to items 1 through 7 under the quality requirements listed in the Quality Requirements Form, Offeror must submit written information that details the general background, experience, and qualifications of the organization. Subcontractors, if applicable, must be also included.

IFB # 20-56

SECTION 3.0

Sidewalk Repairs
REQUIRE BID FORMS /
BIDDERS' CHECKLIST

Please ensure all documents listed on this checklist are included with your bid. Failure to do so may subject the proposer to disqualification.

Required with Sealed Bids

	Signed Cover Letter
	Form for General Bid
	Unit Price Form
	Somerville Living Wage Form
	Quality Requirements Form (Section 2.0)
	Certificate of Non-Collusion & Tax Compliance
	Certificate of Signature Authority
	Reference Form (or equivalent may be attached)
	5% Bid Deposit
	Prevailing Wages Statement of Compliance Form
	OSHA Form
	Vulnerable Road Users Ordinance
	Acknowledgement of Addenda (if applicable)
	Signed W9

Required with Contract, *Post Award*

	Certificate of Good Standing (will be required of awarded Vendor; please furnish with bid if available)
	Insurance Specifications (will be required of awarded Vendor; furnish sample certificate with bid, if possible)
	Statement of Management (if applicable)
	Payment Bond (50% of the contract value)

Non-Collusion Form and Tax Compliance Certification

Instructions: Complete each part of this two-part form and sign and date where indicated below.

A. NON-COLLUSION FORM

I, the undersigned, hereby certify under penalties of perjury that this bid or proposal has been made and submitted in good faith and without collusion or fraud with any other person.

As used in this certification, the word "person" shall mean any natural person, business, partnership, corporation, union, committee, club, or other organization, entity, or group of individuals.

Signature: _____
(Individual Submitted Bid or Proposal)
Duly Authorized

Name of Business or Entity:_____

Date: _____

B. TAX COMPLIANCE CERTIFICATION

Pursuant to M.G.L. c. 62C, §49A, I certify under the penalties of perjury that, to the best of my knowledge and belief, I am in compliance with all laws of the Commonwealth relating to taxes, reporting of employees and contractors, and withholding and remitting child support, as well as paid all contributions and payments in lieu of contributions pursuant to MGL 151A, §19A(b).

Signature: _____
(Duly Authorized Representative of Vendor)

Name of Business or Entity:_____

Social Security Number or Federal Tax ID#:_____

Date: _____

Print

REFERENCE FORM

Bidder: _____

IFB Title: _____

Bidder must provide references for: Three other similar sized Municipalities provided the same services

Reference:_____ Contact:_____

Address:_____ Phone:_____

_____ Email:_____

Description and date(s) of supplies or services provided:_____

_____

_____

Reference:_____ Contact:_____

Address:_____ Phone:_____

_____ Email:_____

Description and date(s) of supplies or services provided:_____

_____

_____

Reference:_____ Contact:_____

Address:_____ Phone:_____

_____ Email:_____

Description and date(s) of supplies or services provided:_____

_____

_____

Form **W-9**
(Rev. October 2018)
Department of the Treasury
Internal Revenue Service

Request for Taxpayer Identification Number and Certification

▶ Go to *www.irs.gov/FormW9* for instructions and the latest information.

Give Form to the requester. Do not send to the IRS.

Print or type.
See **Specific Instructions** on page 3.

1 Name (as shown on your income tax return). Name is required on this line; do not leave this line blank.

2 Business name/disregarded entity name, if different from above

3 Check appropriate box for federal tax classification of the person whose name is entered on line 1. Check only **one** of the following seven boxes.

☐ Individual/sole proprietor or single-member LLC ☐ C Corporation ☐ S Corporation ☐ Partnership ☐ Trust/estate

☐ Limited liability company. Enter the tax classification (C=C corporation, S=S corporation, P=Partnership) ▶ _____

Note: Check the appropriate box in the line above for the tax classification of the single-member owner. Do not check LLC if the LLC is classified as a single-member LLC that is disregarded from the owner unless the owner of the LLC is another LLC that is **not** disregarded from the owner for U.S. federal tax purposes. Otherwise, a single-member LLC that is disregarded from the owner should check the appropriate box for the tax classification of its owner.

☐ Other (see instructions) ▶

4 Exemptions (codes apply only to certain entities, not individuals; see instructions on page 3):

Exempt payee code (if any) _____

Exemption from FATCA reporting code (if any) _____

(Applies to accounts maintained outside the U.S.)

5 Address (number, street, and apt. or suite no.) See instructions.

Requester's name and address (optional)

6 City, state, and ZIP code

7 List account number(s) here (optional)

Part I Taxpayer Identification Number (TIN)

Enter your TIN in the appropriate box. The TIN provided must match the name given on line 1 to avoid backup withholding. For individuals, this is generally your social security number (SSN). However, for a resident alien, sole proprietor, or disregarded entity, see the instructions for Part I, later. For other entities, it is your employer identification number (EIN). If you do not have a number, see *How to get a TIN,* later.

Note: If the account is in more than one name, see the instructions for line 1. Also see *What Name and Number To Give the Requester* for guidelines on whose number to enter.

Social security number

☐☐☐ – ☐☐ – ☐☐☐☐

or

Employer identification number

☐☐ – ☐☐☐☐☐☐☐

Part II Certification

Under penalties of perjury, I certify that:

1. The number shown on this form is my correct taxpayer identification number (or I am waiting for a number to be issued to me); and
2. I am not subject to backup withholding because: (a) I am exempt from backup withholding, or (b) I have not been notified by the Internal Revenue Service (IRS) that I am subject to backup withholding as a result of a failure to report all interest or dividends, or (c) the IRS has notified me that I am no longer subject to backup withholding; and
3. I am a U.S. citizen or other U.S. person (defined below); and
4. The FATCA code(s) entered on this form (if any) indicating that I am exempt from FATCA reporting is correct.

Certification instructions. You must cross out item 2 above if you have been notified by the IRS that you are currently subject to backup withholding because you have failed to report all interest and dividends on your tax return. For real estate transactions, item 2 does not apply. For mortgage interest paid, acquisition or abandonment of secured property, cancellation of debt, contributions to an individual retirement arrangement (IRA), and generally, payments other than interest and dividends, you are not required to sign the certification, but you must provide your correct TIN. See the instructions for Part II, later.

Sign Here **Signature of U.S. person ▶** **Date ▶**

General Instructions

Section references are to the Internal Revenue Code unless otherwise noted.

Future developments. For the latest information about developments related to Form W-9 and its instructions, such as legislation enacted after they were published, go to *www.irs.gov/FormW9.*

Purpose of Form

An individual or entity (Form W-9 requester) who is required to file an information return with the IRS must obtain your correct taxpayer identification number (TIN) which may be your social security number (SSN), individual taxpayer identification number (ITIN), adoption taxpayer identification number (ATIN), or employer identification number (EIN), to report on an information return the amount paid to you, or other amount reportable on an information return. Examples of information returns include, but are not limited to, the following.

- Form 1099-INT (interest earned or paid)
- Form 1099-DIV (dividends, including those from stocks or mutual funds)
- Form 1099-MISC (various types of income, prizes, awards, or gross proceeds)
- Form 1099-B (stock or mutual fund sales and certain other transactions by brokers)
- Form 1099-S (proceeds from real estate transactions)
- Form 1099-K (merchant card and third party network transactions)
- Form 1098 (home mortgage interest), 1098-E (student loan interest), 1098-T (tuition)
- Form 1099-C (canceled debt)
- Form 1099-A (acquisition or abandonment of secured property)

Use Form W-9 only if you are a U.S. person (including a resident alien), to provide your correct TIN.

If you do not return Form W-9 to the requester with a TIN, you might be subject to backup withholding. See What is backup withholding, *later.*

By signing the filled-out form, you:

1. Certify that the TIN you are giving is correct (or you are waiting for a number to be issued),

2. Certify that you are not subject to backup withholding, or

3. Claim exemption from backup withholding if you are a U.S. exempt payee. If applicable, you are also certifying that as a U.S. person, your allocable share of any partnership income from a U.S. trade or business is not subject to the withholding tax on foreign partners' share of effectively connected income, and

4. Certify that FATCA code(s) entered on this form (if any) indicating that you are exempt from the FATCA reporting, is correct. See *What is FATCA reporting,* later, for further information.

Note: If you are a U.S. person and a requester gives you a form other than Form W-9 to request your TIN, you must use the requester's form if it is substantially similar to this Form W-9.

Definition of a U.S. person. For federal tax purposes, you are considered a U.S. person if you are:

- An individual who is a U.S. citizen or U.S. resident alien;
- A partnership, corporation, company, or association created or organized in the United States or under the laws of the United States;
- An estate (other than a foreign estate); or
- A domestic trust (as defined in Regulations section 301.7701-7).

Special rules for partnerships. Partnerships that conduct a trade or business in the United States are generally required to pay a withholding tax under section 1446 on any foreign partners' share of effectively connected taxable income from such business. Further, in certain cases where a Form W-9 has not been received, the rules under section 1446 require a partnership to presume that a partner is a foreign person, and pay the section 1446 withholding tax. Therefore, if you are a U.S. person that is a partner in a partnership conducting a trade or business in the United States, provide Form W-9 to the partnership to establish your U.S. status and avoid section 1446 withholding on your share of partnership income.

In the cases below, the following person must give Form W-9 to the partnership for purposes of establishing its U.S. status and avoiding withholding on its allocable share of net income from the partnership conducting a trade or business in the United States.

- In the case of a disregarded entity with a U.S. owner, the U.S. owner of the disregarded entity and not the entity;
- In the case of a grantor trust with a U.S. grantor or other U.S. owner, generally, the U.S. grantor or other U.S. owner of the grantor trust and not the trust; and
- In the case of a U.S. trust (other than a grantor trust), the U.S. trust (other than a grantor trust) and not the beneficiaries of the trust.

Foreign person. If you are a foreign person or the U.S. branch of a foreign bank that has elected to be treated as a U.S. person, do not use Form W-9. Instead, use the appropriate Form W-8 or Form 8233 (see Pub. 515, Withholding of Tax on Nonresident Aliens and Foreign Entities).

Nonresident alien who becomes a resident alien. Generally, only a nonresident alien individual may use the terms of a tax treaty to reduce or eliminate U.S. tax on certain types of income. However, most tax treaties contain a provision known as a "saving clause." Exceptions specified in the saving clause may permit an exemption from tax to continue for certain types of income even after the payee has otherwise become a U.S. resident alien for tax purposes.

If you are a U.S. resident alien who is relying on an exception contained in the saving clause of a tax treaty to claim an exemption from U.S. tax on certain types of income, you must attach a statement to Form W-9 that specifies the following five items.

1. The treaty country. Generally, this must be the same treaty under which you claimed exemption from tax as a nonresident alien.

2. The treaty article addressing the income.

3. The article number (or location) in the tax treaty that contains the saving clause and its exceptions.

4. The type and amount of income that qualifies for the exemption from tax.

5. Sufficient facts to justify the exemption from tax under the terms of the treaty article.

Example. Article 20 of the U.S.-China income tax treaty allows an exemption from tax for scholarship income received by a Chinese student temporarily present in the United States. Under U.S. law, this student will become a resident alien for tax purposes if his or her stay in the United States exceeds 5 calendar years. However, paragraph 2 of the first Protocol to the U.S.-China treaty (dated April 30, 1984) allows the provisions of Article 20 to continue to apply even after the Chinese student becomes a resident alien of the United States. A Chinese student who qualifies for this exception (under paragraph 2 of the first protocol) and is relying on this exception to claim an exemption from tax on his or her scholarship or fellowship income would attach to Form W-9 a statement that includes the information described above to support that exemption.

If you are a nonresident alien or a foreign entity, give the requester the appropriate completed Form W-8 or Form 8233.

Backup Withholding

What is backup withholding? Persons making certain payments to you must under certain conditions withhold and pay to the IRS 24% of such payments. This is called "backup withholding." Payments that may be subject to backup withholding include interest, tax-exempt interest, dividends, broker and barter exchange transactions, rents, royalties, nonemployee pay, payments made in settlement of payment card and third party network transactions, and certain payments from fishing boat operators. Real estate transactions are not subject to backup withholding.

You will not be subject to backup withholding on payments you receive if you give the requester your correct TIN, make the proper certifications, and report all your taxable interest and dividends on your tax return.

Payments you receive will be subject to backup withholding if:

1. You do not furnish your TIN to the requester,

2. You do not certify your TIN when required (see the instructions for Part II for details),

3. The IRS tells the requester that you furnished an incorrect TIN,

4. The IRS tells you that you are subject to backup withholding because you did not report all your interest and dividends on your tax return (for reportable interest and dividends only), or

5. You do not certify to the requester that you are not subject to backup withholding under 4 above (for reportable interest and dividend accounts opened after 1983 only).

Certain payees and payments are exempt from backup withholding. See *Exempt payee code,* later, and the separate Instructions for the Requester of Form W-9 for more information.

Also see *Special rules for partnerships,* earlier.

What is FATCA Reporting?

The Foreign Account Tax Compliance Act (FATCA) requires a participating foreign financial institution to report all United States account holders that are specified United States persons. Certain payees are exempt from FATCA reporting. See *Exemption from FATCA reporting code,* later, and the Instructions for the Requester of Form W-9 for more information.

Updating Your Information

You must provide updated information to any person to whom you claimed to be an exempt payee if you are no longer an exempt payee and anticipate receiving reportable payments in the future from this person. For example, you may need to provide updated information if you are a C corporation that elects to be an S corporation, or if you no longer are tax exempt. In addition, you must furnish a new Form W-9 if the name or TIN changes for the account; for example, if the grantor of a grantor trust dies.

Penalties

Failure to furnish TIN. If you fail to furnish your correct TIN to a requester, you are subject to a penalty of $50 for each such failure unless your failure is due to reasonable cause and not to willful neglect.

Civil penalty for false information with respect to withholding. If you make a false statement with no reasonable basis that results in no backup withholding, you are subject to a $500 penalty.

Criminal penalty for falsifying information. Willfully falsifying certifications or affirmations may subject you to criminal penalties including fines and/or imprisonment.

Misuse of TINs. If the requester discloses or uses TINs in violation of federal law, the requester may be subject to civil and criminal penalties.

Specific Instructions

Line 1

You must enter one of the following on this line; **do not** leave this line blank. The name should match the name on your tax return.

If this Form W-9 is for a joint account (other than an account maintained by a foreign financial institution (FFI)), list first, and then circle, the name of the person or entity whose number you entered in Part I of Form W-9. If you are providing Form W-9 to an FFI to document a joint account, each holder of the account that is a U.S. person must provide a Form W-9.

a. **Individual.** Generally, enter the name shown on your tax return. If you have changed your last name without informing the Social Security Administration (SSA) of the name change, enter your first name, the last name as shown on your social security card, and your new last name.

Note: ITIN applicant: Enter your individual name as it was entered on your Form W-7 application, line 1a. This should also be the same as the name you entered on the Form 1040/1040A/1040EZ you filed with your application.

b. **Sole proprietor or single-member LLC.** Enter your individual name as shown on your 1040/1040A/1040EZ on line 1. You may enter your business, trade, or "doing business as" (DBA) name on line 2.

c. **Partnership, LLC that is not a single-member LLC, C corporation, or S corporation.** Enter the entity's name as shown on the entity's tax return on line 1 and any business, trade, or DBA name on line 2.

d. **Other entities.** Enter your name as shown on required U.S. federal tax documents on line 1. This name should match the name shown on the charter or other legal document creating the entity. You may enter any business, trade, or DBA name on line 2.

e. **Disregarded entity.** For U.S. federal tax purposes, an entity that is disregarded as an entity separate from its owner is treated as a "disregarded entity." See Regulations section 301.7701-2(c)(2)(iii). Enter the owner's name on line 1. The name of the entity entered on line 1 should never be a disregarded entity. The name on line 1 should be the name shown on the income tax return on which the income should be reported. For example, if a foreign LLC that is treated as a disregarded entity for U.S. federal tax purposes has a single owner that is a U.S. person, the U.S. owner's name is required to be provided on line 1. If the direct owner of the entity is also a disregarded entity, enter the first owner that is not disregarded for federal tax purposes. Enter the disregarded entity's name on line 2, "Business name/disregarded entity name." If the owner of the disregarded entity is a foreign person, the owner must complete an appropriate Form W-8 instead of a Form W-9. This is the case even if the foreign person has a U.S. TIN.

Line 2

If you have a business name, trade name, DBA name, or disregarded entity name, you may enter it on line 2.

Line 3

Check the appropriate box on line 3 for the U.S. federal tax classification of the person whose name is entered on line 1. Check only one box on line 3.

IF the entity/person on line 1 is a(n) . . .	THEN check the box for . . .
• Corporation	Corporation
• Individual • Sole proprietorship, or • Single-member limited liability company (LLC) owned by an individual and disregarded for U.S. federal tax purposes.	Individual/sole proprietor or single-member LLC
• LLC treated as a partnership for U.S. federal tax purposes, • LLC that has filed Form 8832 or 2553 to be taxed as a corporation, or • LLC that is disregarded as an entity separate from its owner but the owner is another LLC that is not disregarded for U.S. federal tax purposes.	Limited liability company and enter the appropriate tax classification. (P= Partnership; C= C corporation; or S= S corporation)
• Partnership	Partnership
• Trust/estate	Trust/estate

Line 4, Exemptions

If you are exempt from backup withholding and/or FATCA reporting, enter in the appropriate space on line 4 any code(s) that may apply to you.

Exempt payee code.

- Generally, individuals (including sole proprietors) are not exempt from backup withholding.
- Except as provided below, corporations are exempt from backup withholding for certain payments, including interest and dividends.
- Corporations are not exempt from backup withholding for payments made in settlement of payment card or third party network transactions.
- Corporations are not exempt from backup withholding with respect to attorneys' fees or gross proceeds paid to attorneys, and corporations that provide medical or health care services are not exempt with respect to payments reportable on Form 1099-MISC.

The following codes identify payees that are exempt from backup withholding. Enter the appropriate code in the space in line 4.

1—An organization exempt from tax under section 501(a), any IRA, or a custodial account under section 403(b)(7) if the account satisfies the requirements of section 401(f)(2)

2—The United States or any of its agencies or instrumentalities

3—A state, the District of Columbia, a U.S. commonwealth or possession, or any of their political subdivisions or instrumentalities

4—A foreign government or any of its political subdivisions, agencies, or instrumentalities

5—A corporation

6—A dealer in securities or commodities required to register in the United States, the District of Columbia, or a U.S. commonwealth or possession

7—A futures commission merchant registered with the Commodity Futures Trading Commission

8—A real estate investment trust

9—An entity registered at all times during the tax year under the Investment Company Act of 1940

10—A common trust fund operated by a bank under section 584(a)

11—A financial institution

12—A middleman known in the investment community as a nominee or custodian

13—A trust exempt from tax under section 664 or described in section 4947

The following chart shows types of payments that may be exempt from backup withholding. The chart applies to the exempt payees listed above, 1 through 13.

IF the payment is for . . .	THEN the payment is exempt for . . .
Interest and dividend payments	All exempt payees except for 7
Broker transactions	Exempt payees 1 through 4 and 6 through 11 and all C corporations. S corporations must not enter an exempt payee code because they are exempt only for sales of noncovered securities acquired prior to 2012.
Barter exchange transactions and patronage dividends	Exempt payees 1 through 4
Payments over $600 required to be reported and direct sales over $5,000[1]	Generally, exempt payees 1 through 5[2]
Payments made in settlement of payment card or third party network transactions	Exempt payees 1 through 4

[1] See Form 1099-MISC, Miscellaneous Income, and its instructions.

[2] However, the following payments made to a corporation and reportable on Form 1099-MISC are not exempt from backup withholding: medical and health care payments, attorneys' fees, gross proceeds paid to an attorney reportable under section 6045(f), and payments for services paid by a federal executive agency.

Exemption from FATCA reporting code. The following codes identify payees that are exempt from reporting under FATCA. These codes apply to persons submitting this form for accounts maintained outside of the United States by certain foreign financial institutions. Therefore, if you are only submitting this form for an account you hold in the United States, you may leave this field blank. Consult with the person requesting this form if you are uncertain if the financial institution is subject to these requirements. A requester may indicate that a code is not required by providing you with a Form W-9 with "Not Applicable" (or any similar indication) written or printed on the line for a FATCA exemption code.

A—An organization exempt from tax under section 501(a) or any individual retirement plan as defined in section 7701(a)(37)

B—The United States or any of its agencies or instrumentalities

C—A state, the District of Columbia, a U.S. commonwealth or possession, or any of their political subdivisions or instrumentalities

D—A corporation the stock of which is regularly traded on one or more established securities markets, as described in Regulations section 1.1472-1(c)(1)(i)

E—A corporation that is a member of the same expanded affiliated group as a corporation described in Regulations section 1.1472-1(c)(1)(i)

F—A dealer in securities, commodities, or derivative financial instruments (including notional principal contracts, futures, forwards, and options) that is registered as such under the laws of the United States or any state

G—A real estate investment trust

H—A regulated investment company as defined in section 851 or an entity registered at all times during the tax year under the Investment Company Act of 1940

I—A common trust fund as defined in section 584(a)

J—A bank as defined in section 581

K—A broker

L—A trust exempt from tax under section 664 or described in section 4947(a)(1)

M—A tax exempt trust under a section 403(b) plan or section 457(g) plan

Note: You may wish to consult with the financial institution requesting this form to determine whether the FATCA code and/or exempt payee code should be completed.

Line 5

Enter your address (number, street, and apartment or suite number). This is where the requester of this Form W-9 will mail your information returns. If this address differs from the one the requester already has on file, write NEW at the top. If a new address is provided, there is still a chance the old address will be used until the payor changes your address in their records.

Line 6

Enter your city, state, and ZIP code.

Part I. Taxpayer Identification Number (TIN)

Enter your TIN in the appropriate box. If you are a resident alien and you do not have and are not eligible to get an SSN, your TIN is your IRS individual taxpayer identification number (ITIN). Enter it in the social security number box. If you do not have an ITIN, see *How to get a TIN* below.

If you are a sole proprietor and you have an EIN, you may enter either your SSN or EIN.

If you are a single-member LLC that is disregarded as an entity separate from its owner, enter the owner's SSN (or EIN, if the owner has one). Do not enter the disregarded entity's EIN. If the LLC is classified as a corporation or partnership, enter the entity's EIN.

Note: See *What Name and Number To Give the Requester,* later, for further clarification of name and TIN combinations.

How to get a TIN. If you do not have a TIN, apply for one immediately. To apply for an SSN, get Form SS-5, Application for a Social Security Card, from your local SSA office or get this form online at *www.SSA.gov*. You may also get this form by calling 1-800-772-1213. Use Form W-7, Application for IRS Individual Taxpayer Identification Number, to apply for an ITIN, or Form SS-4, Application for Employer Identification Number, to apply for an EIN. You can apply for an EIN online by accessing the IRS website at *www.irs.gov/Businesses* and clicking on Employer Identification Number (EIN) under Starting a Business. Go to *www.irs.gov/Forms* to view, download, or print Form W-7 and/or Form SS-4. Or, you can go to *www.irs.gov/OrderForms* to place an order and have Form W-7 and/or SS-4 mailed to you within 10 business days.

If you are asked to complete Form W-9 but do not have a TIN, apply for a TIN and write "Applied For" in the space for the TIN, sign and date the form, and give it to the requester. For interest and dividend payments, and certain payments made with respect to readily tradable instruments, generally you will have 60 days to get a TIN and give it to the requester before you are subject to backup withholding on payments. The 60-day rule does not apply to other types of payments. You will be subject to backup withholding on all such payments until you provide your TIN to the requester.

Note: Entering "Applied For" means that you have already applied for a TIN or that you intend to apply for one soon.

Caution: A disregarded U.S. entity that has a foreign owner must use the appropriate Form W-8.

Part II. Certification

To establish to the withholding agent that you are a U.S. person, or resident alien, sign Form W-9. You may be requested to sign by the withholding agent even if item 1, 4, or 5 below indicates otherwise.

For a joint account, only the person whose TIN is shown in Part I should sign (when required). In the case of a disregarded entity, the person identified on line 1 must sign. Exempt payees, see *Exempt payee code,* earlier.

Signature requirements. Complete the certification as indicated in items 1 through 5 below.

1. Interest, dividend, and barter exchange accounts opened before 1984 and broker accounts considered active during 1983. You must give your correct TIN, but you do not have to sign the certification.

2. Interest, dividend, broker, and barter exchange accounts opened after 1983 and broker accounts considered inactive during 1983. You must sign the certification or backup withholding will apply. If you are subject to backup withholding and you are merely providing your correct TIN to the requester, you must cross out item 2 in the certification before signing the form.

3. Real estate transactions. You must sign the certification. You may cross out item 2 of the certification.

4. Other payments. You must give your correct TIN, but you do not have to sign the certification unless you have been notified that you have previously given an incorrect TIN. "Other payments" include payments made in the course of the requester's trade or business for rents, royalties, goods (other than bills for merchandise), medical and health care services (including payments to corporations), payments to a nonemployee for services, payments made in settlement of payment card and third party network transactions, payments to certain fishing boat crew members and fishermen, and gross proceeds paid to attorneys (including payments to corporations).

5. Mortgage interest paid by you, acquisition or abandonment of secured property, cancellation of debt, qualified tuition program payments (under section 529), ABLE accounts (under section 529A), IRA, Coverdell ESA, Archer MSA or HSA contributions or distributions, and pension distributions. You must give your correct TIN, but you do not have to sign the certification.

What Name and Number To Give the Requester

For this type of account:	Give name and SSN of:
1. Individual	The individual
2. Two or more individuals (joint account) other than an account maintained by an FFI	The actual owner of the account or, if combined funds, the first individual on the account[1]
3. Two or more U.S. persons (joint account maintained by an FFI)	Each holder of the account
4. Custodial account of a minor (Uniform Gift to Minors Act)	The minor[2]
5. a. The usual revocable savings trust (grantor is also trustee)	The grantor-trustee[1]
b. So-called trust account that is not a legal or valid trust under state law	The actual owner[1]
6. Sole proprietorship or disregarded entity owned by an individual	The owner[3]
7. Grantor trust filing under Optional Form 1099 Filing Method 1 (see Regulations section 1.671-4(b)(2)(i)(A))	The grantor*
For this type of account:	**Give name and EIN of:**
8. Disregarded entity not owned by an individual	The owner
9. A valid trust, estate, or pension trust	Legal entity[4]
10. Corporation or LLC electing corporate status on Form 8832 or Form 2553	The corporation
11. Association, club, religious, charitable, educational, or other tax-exempt organization	The organization
12. Partnership or multi-member LLC	The partnership
13. A broker or registered nominee	The broker or nominee
14. Account with the Department of Agriculture in the name of a public entity (such as a state or local government, school district, or prison) that receives agricultural program payments	The public entity
15. Grantor trust filing under the Form 1041 Filing Method or the Optional Form 1099 Filing Method 2 (see Regulations section 1.671-4(b)(2)(i)(B))	The trust

[1] List first and circle the name of the person whose number you furnish. If only one person on a joint account has an SSN, that person's number must be furnished.

[2] Circle the minor's name and furnish the minor's SSN.

[3] You must show your individual name and you may also enter your business or DBA name on the "Business name/disregarded entity" name line. You may use either your SSN or EIN (if you have one), but the IRS encourages you to use your SSN.

[4] List first and circle the name of the trust, estate, or pension trust. (Do not furnish the TIN of the personal representative or trustee unless the legal entity itself is not designated in the account title.) Also see *Special rules for partnerships,* earlier.

***Note:** The grantor also must provide a Form W-9 to trustee of trust.

Note: If no name is circled when more than one name is listed, the number will be considered to be that of the first name listed.

Secure Your Tax Records From Identity Theft

Identity theft occurs when someone uses your personal information such as your name, SSN, or other identifying information, without your permission, to commit fraud or other crimes. An identity thief may use your SSN to get a job or may file a tax return using your SSN to receive a refund.

To reduce your risk:

- Protect your SSN,
- Ensure your employer is protecting your SSN, and
- Be careful when choosing a tax preparer.

If your tax records are affected by identity theft and you receive a notice from the IRS, respond right away to the name and phone number printed on the IRS notice or letter.

If your tax records are not currently affected by identity theft but you think you are at risk due to a lost or stolen purse or wallet, questionable credit card activity or credit report, contact the IRS Identity Theft Hotline at 1-800-908-4490 or submit Form 14039.

For more information, see Pub. 5027, Identity Theft Information for Taxpayers.

Victims of identity theft who are experiencing economic harm or a systemic problem, or are seeking help in resolving tax problems that have not been resolved through normal channels, may be eligible for Taxpayer Advocate Service (TAS) assistance. You can reach TAS by calling the TAS toll-free case intake line at 1-877-777-4778 or TTY/TDD 1-800-829-4059.

Protect yourself from suspicious emails or phishing schemes. Phishing is the creation and use of email and websites designed to mimic legitimate business emails and websites. The most common act is sending an email to a user falsely claiming to be an established legitimate enterprise in an attempt to scam the user into surrendering private information that will be used for identity theft.

The IRS does not initiate contacts with taxpayers via emails. Also, the IRS does not request personal detailed information through email or ask taxpayers for the PIN numbers, passwords, or similar secret access information for their credit card, bank, or other financial accounts.

If you receive an unsolicited email claiming to be from the IRS, forward this message to *phishing@irs.gov.* You may also report misuse of the IRS name, logo, or other IRS property to the Treasury Inspector General for Tax Administration (TIGTA) at 1-800-366-4484. You can forward suspicious emails to the Federal Trade Commission at *spam@uce.gov* or report them at *www.ftc.gov/complaint.* You can contact the FTC at *www.ftc.gov/idtheft* or 877-IDTHEFT (877-438-4338). If you have been the victim of identity theft, see *www.IdentityTheft.gov* and Pub. 5027.

Visit *www.irs.gov/IdentityTheft* to learn more about identity theft and how to reduce your risk.

Privacy Act Notice

Section 6109 of the Internal Revenue Code requires you to provide your correct TIN to persons (including federal agencies) who are required to file information returns with the IRS to report interest, dividends, or certain other income paid to you; mortgage interest you paid; the acquisition or abandonment of secured property; the cancellation of debt; or contributions you made to an IRA, Archer MSA, or HSA. The person collecting this form uses the information on the form to file information returns with the IRS, reporting the above information. Routine uses of this information include giving it to the Department of Justice for civil and criminal litigation and to cities, states, the District of Columbia, and U.S. commonwealths and possessions for use in administering their laws. The information also may be disclosed to other countries under a treaty, to federal and state agencies to enforce civil and criminal laws, or to federal law enforcement and intelligence agencies to combat terrorism. You must provide your TIN whether or not you are required to file a tax return. Under section 3406, payers must generally withhold a percentage of taxable interest, dividend, and certain other payments to a payee who does not give a TIN to the payer. Certain penalties may also apply for providing false or fraudulent information.

Certificate of Authority
(Limited Liability Companies Only)

<u>Instructions</u>: Complete this form and sign and date where indicated below.

1. I, the undersigned, being a member or manager of

_____,
(Complete Name of Limited Liability Company)

a limited liability company (LLC) hereby certify as to the contents of this form for the purpose of contracting with the City of Somerville.

2. The LLC is organized under the laws of the state of: _____.

3. The LLC is managed by **(check one)** a ☐ Manager or by its ☐ Members.

4. I hereby certify that each of the following individual(s) is:
   - a member/manager of the LLC;
   - duly authorized to execute and deliver this contract, agreement, and/or other legally binding documents relating to any contract and/or agreement on behalf of the LLC;
   - duly authorized to do and perform all acts and things necessary or appropriate to carry out the terms of this contract or agreement on behalf of the LLC; and
   - that no resolution, vote, or other document or action is necessary to establish such authority.

Name	Title

5. **Signature**:_____

Printed Name: _____

Printed Title:_____

Date: _____

Certificate of Authority
(Corporations Only)

<u>Instructions</u>: Complete this form and sign and date where indicated below.

1. I hereby certify that I, the undersigned, am the duly elected Clerk/Secretary of

_____.
(Insert Full Name of Corporation)

2. I hereby certify that the following individual _____
(Insert the Name of Officer who Signed the Contract and Bonds)

is the duly elected_____ of said Corporation.
(Insert the Title of the Officer in Line 2)

3. I hereby certify that on _____
(Insert Date: Must be *on or before* Date Officer Signed Contract/Bonds)

at a duly authorized meeting of the Board of Directors of said corporation, at which a quorum was present, it was voted that

_____ _____
(Insert Name of Officer from Line 2) (Insert Title of Officer from Line 2)

of this corporation be and hereby is authorized to make, enter into, execute, and deliver contracts and bonds in the name and on behalf of said corporation, and affix its Corporate Seal thereto, and such execution of any contract of obligation in this corporation's name and on its behalf, with or without the Corporate Seal, shall be valid and binding upon this corporation; and that the above vote has not been amended or rescinded and remains in full force and effect as of the date set forth below.

4. **ATTEST**:
Signature: _____ ***AFFIX CORPORATE SEAL HERE***
(Clerk or Secretary)
Printed Name: _____

Printed Title:_____

Date: _____
(Date Must Be *on or after* Date Officer Signed Contract/Bonds)

Print

SECRETARY OF THE COMMONWEALTH'S

CERTIFICATE OF GOOD STANDING

CERTIFICATE OF GOOD STANDING as provided by the Secretary of the Commonwealth

The **Awarded Vendor** must comply with our request for a **CURRENT "Certificate of Good Standing" provided by the Secretary of the Commonwealth's Office**

NOTE: A Certificate of Good Standing provided by the Department of Revenue will NOT be accepted. The Certificate *must* be provided by the Secretary of the Commonwealth's Office.

If you require information on how to obtain the "Certificate of Good Standing" or Certificate of Registration (Foreign Corporations) from the Commonwealth of Massachusetts, please call the

Secretary of The Commonwealth's Office at (617) 727-2850 (Press #1) located at One (1) Ashburton Place, 17 Floor, Boston, MA 02133 or you may access their web site at: http://corp.sec.state.ma.us/CorpWeb/Certificates/CertificateOrderForm.aspx

If your company is incorporated outside of Massachusetts and therefore is a "foreign corporation", but is registered to do business in Massachusetts, please comply with our request for the Certificate of Registration from the Commonwealth of Massachusetts. If your company is a foreign corporation, but is not registered to do business in Massachusetts, please provide the Certificate of Good Standing from your state of incorporation.

Please note that without the above certificate (s), the City of Somerville cannot execute your contract.

IMPORTANT NOTICE

Requests for Certificates of Good Standing by mail may take a substantial amount of time. A certificate may be obtained immediately in person at the Secretary's Office at the address above. Also, at this time, the Secretary of State's Office may not have your current annual report recorded. If this is the case, and you are therefore unable to obtain the Certificate of Good Standing, please forward a copy of your annual report filing fee check with your signed contracts. Please forward your original Certificate of Good Standing to the Purchasing Department upon receipt.

INSURANCE SPECIFICATIONS
INSURANCE REQUIREMENTS FOR AWARDED VENDOR ONLY:

Prior to commencing performance of any work or supplying materials or equipment covered by these specifications, the contractor shall furnish to the Office of the Purchasing Director a Certificate of Insurance evidencing the following:

A. GENERAL LIABILITY - Comprehensive Form

Bodily Injury Liability.....….....$ One Million

Property Damage Liability.....$ One Million

B. COVERAGE FOR PAYMENT OF WORKER'S COMPENSATION BENEFIT PURSUANT TO CHAPTER 152 OF THE MASSACHUSETTS GENERAL LAWS IN THE AMOUNT AS LISTED BELOW:

WORKER'S COMPENSATION….....$Statutory

EMPLOYERS' LIABILITY..….....…….$ Statutory

C. AUTOMOBILE LIABILITY INSURANCE AS LISTED BELOW:

BODILY INJURY LIABILITY.....$ STATUTORY

l. A contract will not be executed unless a certificate (s) of insurance evidencing above-described coverage is attached.
2. Failure to have the above-described coverage in effect during the entire period of the contract shall be deemed to be a breach of the contract.
3. All applicable insurance policies shall read:
"CITY OF SOMERVILLE" as a certificate holder and as an additional insured for general liability only along with a description of operation in the space provided on the certificate.

Certificate Should Be Made Out To:
City Of Somerville
c/o Purchasing Department
93 Highland Avenue
Somerville, Ma. 02143

Note: If your insurance expires during the life of this contract, you shall be responsible to submit a new certificate(s) covering the period of the contract. No payment will be made on a contract with an expired insurance certificate.

CERTIFICATE OF LIABILITY INSURANCE

DATE (MM/DD/YYYY)

THIS CERTIFICATE IS ISSUED AS A MATTER OF INFORMATION ONLY AND CONFERS NO RIGHTS UPON THE CERTIFICATE HOLDER. THIS CERTIFICATE DOES NOT AFFIRMATIVELY OR NEGATIVELY AMEND, EXTEND OR ALTER THE COVERAGE AFFORDED BY THE POLICIES BELOW. THIS CERTIFICATE OF INSURANCE DOES NOT CONSTITUTE A CONTRACT BETWEEN THE ISSUING INSURER(S), AUTHORIZED REPRESENTATIVE OR PRODUCER, AND THE CERTIFICATE HOLDER.

IMPORTANT: If the certificate holder is an ADDITIONAL INSURED, the policy(ies) must be endorsed. If SUBROGATION IS WAIVED, subject to the terms and conditions of the policy, certain policies may require an endorsement. A statement on this certificate does not confer rights to the certificate holder in lieu of such endorsement(s).

PRODUCER	CONTACT NAME:	
	PHONE (A/C, No, Ext):	FAX (A/C, No):
	E-MAIL ADDRESS:	
	INSURER(S) AFFORDING COVERAGE	NAIC #
	INSURER A :	
INSURED	INSURER B :	
	INSURER C :	
	INSURER D :	
	INSURER E :	
	INSURER F :	

COVERAGES **CERTIFICATE NUMBER:** **REVISION NUMBER:**

THIS IS TO CERTIFY THAT THE POLICIES OF INSURANCE LISTED BELOW HAVE BEEN ISSUED TO THE INSURED NAMED ABOVE FOR THE POLICY PERIOD INDICATED. NOTWITHSTANDING ANY REQUIREMENT, TERM OR CONDITION OF ANY CONTRACT OR OTHER DOCUMENT WITH RESPECT TO WHICH THIS CERTIFICATE MAY BE ISSUED OR MAY PERTAIN, THE INSURANCE AFFORDED BY THE POLICIES DESCRIBED HEREIN IS SUBJECT TO ALL THE TERMS, EXCLUSIONS AND CONDITIONS OF SUCH POLICIES. LIMITS SHOWN MAY HAVE BEEN REDUCED BY PAID CLAIMS.

INSR LTR	TYPE OF INSURANCE	ADDL INSR	SUBR WVD	POLICY NUMBER	POLICY EFF (MM/DD/YYYY)	POLICY EXP (MM/DD/YYYY)	LIMITS	
	GENERAL LIABILITY						EACH OCCURRENCE	$
	COMMERCIAL GENERAL LIABILITY						DAMAGE TO RENTED PREMISES (Ea occurrence)	$
	CLAIMS-MADE / OCCUR						MED EXP (Any one person)	$
							PERSONAL & ADV INJURY	$
							GENERAL AGGREGATE	$
	GEN'L AGGREGATE LIMIT APPLIES PER:						PRODUCTS - COMP/OP AGG	$
	POLICY / PRO-JECT / LOC							$
	AUTOMOBILE LIABILITY						COMBINED SINGLE LIMIT (Ea accident)	$
	ANY AUTO						BODILY INJURY (Per person)	$
	ALL OWNED AUTOS / SCHEDULED AUTOS						BODILY INJURY (Per accident)	$
	HIRED AUTOS / NON-OWNED AUTOS						PROPERTY DAMAGE (Per accident)	$
								$
	UMBRELLA LIAB / OCCUR						EACH OCCURRENCE	$
	EXCESS LIAB / CLAIMS-MADE						AGGREGATE	$
	DED / RETENTION $							$
	WORKERS COMPENSATION AND EMPLOYERS' LIABILITY						WC STATU-TORY LIMITS / OTH-ER	
	ANY PROPRIETOR/PARTNER/EXECUTIVE OFFICER/MEMBER EXCLUDED? Y / N (Mandatory in NH) If yes, describe under DESCRIPTION OF OPERATIONS below	N / A					E.L. EACH ACCIDENT	$
							E.L. DISEASE - EA EMPLOYEE	$
							E.L. DISEASE - POLICY LIMIT	$

ADD "X" HERETO CERTIFY THAT THE CITY OF SOMERVILLE IS AN ADDITIONAL INSURED

DESCRIPTION OF OPERATIONS / LOCATIONS / VEHICLES (Attach ACORD 101, Additional Remarks Schedule, if more space is required)

DESCRIPTION OF PROJECT, SOLICITATION NUMBER AND THAT THE CITY OF SOMERVILLE IS A CERTIFICATE HOLDER AND ADDITIONAL INSURED

CERTIFICATE HOLDER

CERTIFICATES SHOULD BE MADE OUT TO:

CITY OF SOMERVILLE
c/o PURCHASING DEPARTMENT
93 HIGHLAND AVE
SOMERVILLE, MA 02143

CANCELLATION

SHOULD ANY OF THE ABOVE DESCRIBED POLICIES BE CANCELLED BEFORE THE EXPIRATION DATE THEREOF, NOTICE WILL BE DELIVERED IN ACCORDANCE WITH THE POLICY PROVISIONS.

AUTHORIZED REPRESENTATIVE

© 1988-2010 ACORD CORPORATION. All rights reserved.

The ACORD name and logo are registered marks of ACORD

SOMERVILLE LIVING WAGE ORDINANCE CERTIFICATION FORM

CITY OF SOMERVILLE CODE OF ORDINANCES SECTION 2-397 et seq*.

Instructions: This form shall be included in all Invitations for Bids and Requests for Proposals which involve the furnishing of labor, time or effort (with no end product other than reports) by vendors contracting or subcontracting with the City of Somerville, where the contract price meets or exceeds the following dollar threshold: $10,000. If the undersigned is selected, this form will be attached to the contract or subcontract and the certifications made herein shall be incorporated as part of such contract or subcontract. **Complete this form and sign and date where indicated below on page 2.**

Purpose: The purpose of this form is to ensure that such vendors pay a "Living Wage" (defined below) to all covered employees (i.e., all employees except individuals in a city, state or federally funded youth program). In the case of bids, the City will award the contract to the lowest responsive and responsible bidder paying a Living Wage. In the case of RFP's, the City will select the most advantageous proposal from a responsive and responsible offeror paying a Living Wage. In neither case, however, shall the City be under any obligation to select a bid or proposal that exceeds the funds available for the contract.

Definition of "Living Wage": For this contract or subcontract, as of **7/1/2019** "Living Wage" shall be deemed to be an hourly wage of no less than **$15.00** per hour. From time to time, the Living Wage may be upwardly adjusted and amendments, if any, to the contract or subcontract may require the payment of a higher hourly rate if a higher rate is then in effect.

CERTIFICATIONS

1. The undersigned shall pay no less than the Living Wage to all covered employees who directly expend their time on the contract or subcontract with the City of Somerville.

2. The undersigned shall post a notice, (copy enclosed), to be furnished by the contracting City Department, informing covered employees of the protections and obligations provided for in the Somerville Living Wage Ordinance, and that for assistance and information, including copies of the Ordinance, employees should contact the contracting City Department. Such notice shall be posted in each location where services are performed by covered employees, in a conspicuous place where notices to employees are customarily posted.

3. The undersigned shall maintain payrolls for all covered employees and basic records relating hereto and shall preserve them for a period of three years. The records shall contain the name and address of each employee, the number of hours worked, the gross wages, a copy of the social

*Copies of the Ordinance are available upon request to the Purchasing Department.

security returns, and evidence of payment thereof and such other data as may be required by the contracting City Department from time to time.

4. The undersigned shall submit payroll records to the City upon request and, if the City receives information of possible noncompliance with the provisions the Somerville Living Wage Ordinance, the undersigned shall permit City representatives to observe work being performed at the work site, to interview employees, and to examine the books and records relating to the payrolls being investigated to determine payment of wages.

5. The undersigned shall not fund wage increases required by the Somerville Living Wage Ordinance by reducing the health insurance benefits of any of its employees.

6. The undersigned agrees that the penalties and relief set forth in the Somerville Living Wage Ordinance shall be in addition to the rights and remedies set forth in the contract and/or subcontract.

CERTIFIED BY:

Signature: _____
(Duly Authorized Representative of Vendor)

Title: _____

Name of Vendor:_____

Date: _____

INSTRUCTIONS: PLEASE POST

NOTICE TO ALL EMPLOYEES
REGARDING PAYMENT OF LIVING WAGE

Under the Somerville, Massachusetts' Living Wage Ordinance (Ordinance No. 1999-1), any person or entity who has entered into a contract with the City of Somerville is required to pay its employees who are involved in providing services to the City of Somerville no less than a "Living Wage".

The Living Wage as of **7/1/2019** is **$15.00** per hour. The only employees who are not covered by the Living Wage Ordinance are individuals in a Youth Program. "Youth Program" as defined in the Ordinance, "means any city, state or federally funded program which employs youth, as defined by city, state or federal guidelines, during the summer, or as part of a school to work program, or in any other related seasonal or part-time program."

For assistance and information regarding the protections and obligations provided for in the Living Wage Ordinance and/or a copy of the Living Wage Ordinance, all employees should contact the City of Somerville's Purchasing Department directly.

SOMERVILLE ORDNINANCE TO SAFEGUARD VULNERABLE ROAD USERS

CITY OF SOMERVILLE CODE OF ORDINANCES ARTICLE VIII, SEC. 12-117 et seq.

Prospective contractors must familiarize themselves with the City of Somerville's Ordinance to Protect Vulnerable Road Users. The full text of this local law can be found here.

1. **Request for Inspection:** Inspections are conducted on Thursdays from 4pm-7pm at the Somerville Department of Public Works, located at 1 Franey Road. Each inspection takes approximately 20 minutes.
   a. Any vendor covered by this Ordinance shall complete an inspection request form and email it to fleetinspections@somervillema.gov.
   b. Please submit request form no later than 3pm on the Tuesday before the requested inspection date.
2. **Fee:** The fee for the initial inspection is $100. The fee for a renewal inspection (every two years) is $50.
   a. Payment of the fee is due upon scheduling of the inspection. The fee can be paid via check or credit card. Checks should be made out to the City of Somerville and include the vendor's phone number.
3. **Approval:** Vehicles inspected and approved by the Fleet Division will have an inspection approval sticker affixed to the windshield of the vehicle. A copy of the inspection report and certificate of inspection shall be issued to the vendor.
   a. Inspection stickers are not transferable.
   b. Any major overhaul of safe guard equipment shall be required to be re-inspected.
4. **Rejection:** If a vehicle is rejected for failing to comply with any of the technical specifications outlined in the ordinance, it shall be corrected and henceforth re-inspected within 30 days at no additional fee.
   a. If a second inspection results in a rejection, a fee of $50 will be required for any subsequent inspections.
   b. Any vendor who fails to comply within 60 days of their first inspection may be subject to having their contract cancelled.
5. **Questions:** Please direct questions about vehicle inspections to Fleet Superintendent Ron Bonney at rbonney@somervillema.gov or at (617) 625-6600, ext. 5524.

Acknowledgement

In accordance with Sec. 12-119 "Requirements" in the Ordinance, bidders must sign the following:

Unless certified that the Ordinance is not applicable to this contract or otherwise waived by the City, I acknowledge that my company has installed (or will install prior to commencing work for the contract) side guards, cross-over mirrors or equivalent blind spot countermeasures, convex mirrors or equivalent blind spot countermeasures, side-visible turn signals, and appropriate warning signage, in accordance with SCO Chapter 12, Article VII on all large vehicles it uses or will use within the City of Somerville in connection with any contract.

_____

Authorized Signatory's Name Date

_____

Company Name

I certify that the Ordinance does not apply to this contract for the following:

☐ Vehicles do not meet or exceed Class 3 GVWR ☐ Vehicles do not exceed 15 MPH ☐ No vehicles on project

☐ Other:_____

_____

CITY OF SOMERVILLE
TRUCK SIDE GUARD ORDINANCE

Collisions with large vehicles are disproportionately likely to result in cyclist and pedestrian fatalities. The City of Somerville's Ordinance to Safeguard Vulnerable Road Users aims to prevent cyclists and pedestrians from the risk of being struck by a large vehicle because of limited driver visibility and lack of side-visible turn signals, as well as falling under the sides of large vehicles and being caught under the wheels.

The ordinance applies to large motor vehicles that are Class 3 or above with a gross vehicle weight rating (GVWR) exceeding 10,000 pounds, except for an ambulance, fire apparatus, low-speed vehicle with a maximum speed under 15 mph, or an agricultural tractor.

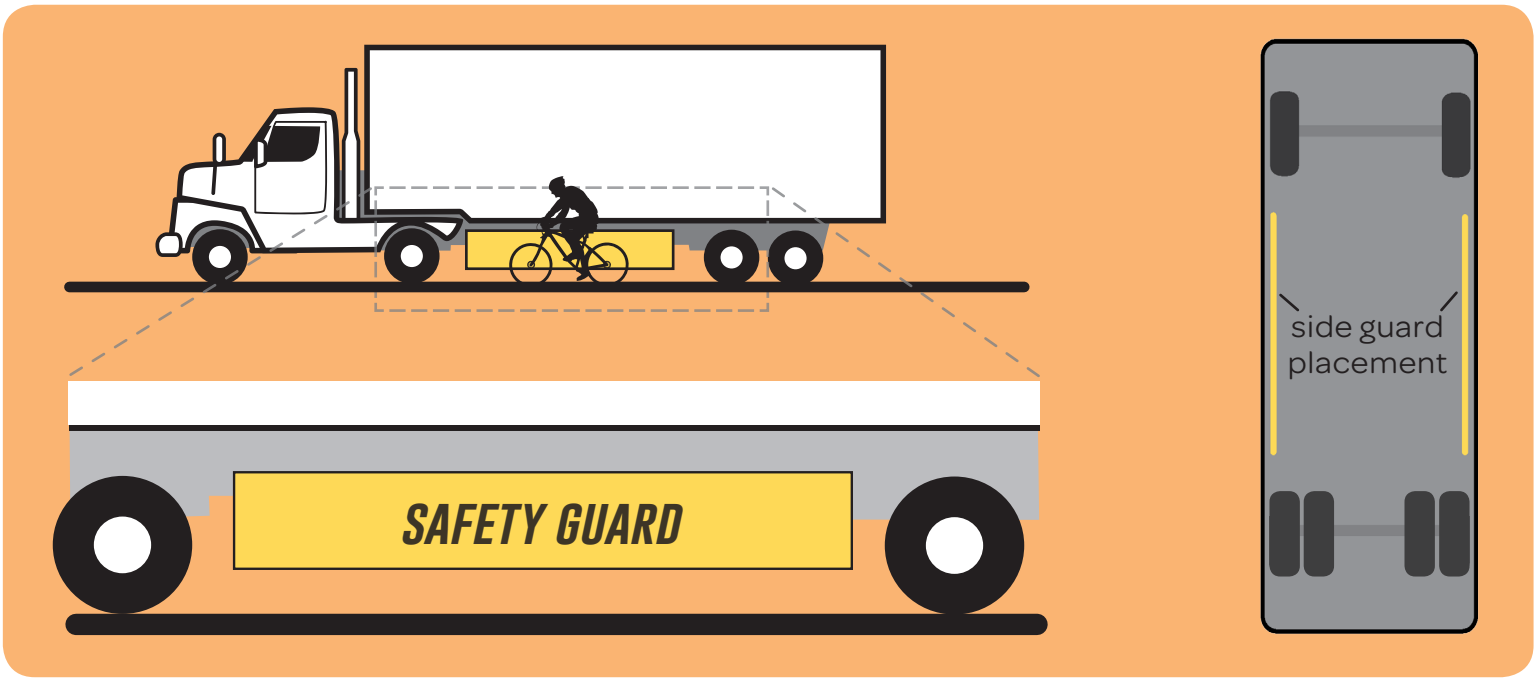

Questions about inspections?

Please contact the Fleet Superintendent, Ron Bonney, at: RBonney@SomervilleMA.gov or (617) 625-6600, ext. 5524.

ORDINANCE REQUIREMENTS

LATERAL PROTECTIVE DEVICES (SIDE GUARDS)

- Vehicles must have device installed between the front & rear wheels to help prevent injuries to vulnerable road users, particularly from falling underneath the vehicle.

SIDE-VISIBLE TURN SIGNALS

- Vehicles must have at least one turn signal lamp on each side of the vehicle that is visible from any point to the left and right side along the full length of the vehicle.

CONVEX MIRRORS

- Vehicles must have mirrors which enable the driver to see anything that is three feet above the road and one foot in front of or alongside of the vehicle.

CROSS-OVER MIRRORS

- Vehicles must have mirrors that enable the driver to see anything at least three feet tall passing one foot in front of the vehicle and the area in front of the bumper where direct vision is not possible.

SAFETY DECALS

- Vehicles must have a minimum of three reflective decals on the rear and sides.
- The decals must be "safety yellow" in color and include language or images that warn of blind spots.

COMMON QUESTIONS

WHAT TYPES OF VEHICLES DOES THIS ORDINANCE APPLY TO? This ordinance applies to Class 3 or above vehicles with a gross vehicle weight rating exceeding 10,000 lbs., except for an ambulance, fire apparatus, low-speed vehicle with max speed under 15 mph, or agricultural tractors.

CAN TOOL BOXES BE USED AS SIDE GUARDS? Yes, as long as the tool box meets all of the required measurements in the ordinance.

IF I RENT TRUCKS FOR A JOB, DO THOSE VEHICLES NEED TO BE INSPECTED AND PERMITTED? Yes.

DO SUBCONTRACTORS' TRUCKS WORKING ON A CITY CONTRACT NEED TO BE INSPECTED & PERMITTED? Yes.

WILL THE CITY DO AN OFF-SITE INSPECTION FOR LARGER FLEETS? Yes, depending on the availability of inspectors and the distance to the site.

REGISTER FOR AN INSPECTION

Email inspection forms to: FleetInspections@SomervilleMA.gov

Questions about inspections? Please contact the Fleet Superintendent, Ron Bonney, at: RBonney@SomervilleMA.gov or (617) 625-6600, ext. 5524

STATEMENT OF MANAGEMENT
For Contracts over $100,000

In accordance with M.G.L. Chapter 30, Section 39R, the undersigned successful bidder states that its system of internal accounting controls and that of its subsidiaries reasonably assure (1) that transactions are executed in accordance with management's general and specific authorization; (2) that transactions are recorded as necessary to permit preparation of financial statements in conformity with generally accepted accounting principles, and to maintain accountability for assets; (3) that access to assets is permitted only in accordance with management's general or specific authorization, and (4) that the recorded accountability for assets is compared with the existing assets at reasonable intervals and appropriate action was taken with respect to any difference.

Executed this _____day of _____ , _____

On behalf of _____
(Name of Successful Bidder)

_____
(Address and telephone of Successful Bidder)

_____
(Name and title of person signing statement)

By:_____
(Signature)

CERTIFIED PUBLIC ACCOUNTANT STATEMENT

In accordance with M.G.L. 30, Section 39R I, _____ a certified public accountant, state that I have examined the above Statement of Management on internal accounting controls, and that in my opinion (1) the representations of management are consistent with the result of management's evaluation of the system of internal accounting controls; and (2) that such representations of management are, in addition, reasonable with respect to transactions and assets in amounts which would be material when measured in relation to the above referenced successful bidder's financial statements.

_____
(Signature)

_____

_____

_____
(Business name, address and telephone number)

OSHA GENERAL CONTRACTOR CERTIFICATION FORM

Pursuant to Chapter 306 of the Acts of 2004
An Act Relative to the Health and Safety on Construction Projects

GENERAL CONTRACTOR'S CERTIFICATION – BID FORM

I, the undersigned, hereby certify under penalties of perjury that I, and all subcontractors who are not filed sub-bidders, shall:

> (1) certify that all employees to be employed at the worksite will have successfully completed a course in construction safety and health approved by the United States Occupational Safety and Health Administration that is a least 10 hours in duration at the time the employee begins work and who shall furnish documentation of successful completion of said course with the first certified payroll report for each employee.

As used in this certification, the word "person" shall mean any natural person, business, partnership, corporation, union, committee, club, or other organization, entity, or group of individuals.

Signature: _____
(Individual Submitting Bid)
Duly Authorized

Name of Business or Entity:_____

Date: _____

RETURN THIS FORM WITH YOUR BID

MASSACHUSETTS WEEKLY CERTIFIED PAYROLL REPORT FORM

Company's Name:	Address:	Phone No.:	Payroll No.:

Employer's Signature:	Title:	Contract No:	Tax Payer ID Number	Work Week Ending:

Awarding Authority's Name:	Public Works Project Name:	Public Works Project Location:	Min. Wage Rate Sheet Number

General / Prime Contractor's Name:	Subcontractor's Name:		"Employer" Hourly Fringe Benefit Contributions

Employee Name & Complete Address	Work Classification:	Employee is OSHA 10 certified (?)	Appr. Rate (%)	Hours Worked Su.	Mo.	Tu.	We.	Th.	Fr.	Sa.	Project Hours (A) / All Other Hours	Hourly Base Wage (B)	Health & Welfare Insurance (C)	ERISA Pension Plan (D)	Supp. Unemp. (E) (B+C+D+E)	Total Hourly Prev. Wage (F) (A x F)	Project Gross Wages / Total Gross Wages	Check No. (H)

Are all apprentice employees identified above currently registered with the MA DLS's Division of Apprentice Standards? YES ☐ NO ☐

For all apprentices performing work during the reporting period, attach a copy of the apprentice identification card issued by the Massachusetts Department of Labor Standards / Division of Apprentice Standards.

No apprentices are identified above ☐

NOTE: Pursuant to MGL c. 149, s. 27B, every contractor and subcontractor is required to submit a **true and accurate** copy of their certified weekly payroll records to the awarding authority by first-class mail or e-mail. In addition, each weekly payroll must be accompanied by a statement of compliance signed by the employer. Failure to comply may result in the commencement of a criminal action or the issuance of a civil citation.

Date Received by Awarding Authority
/ /

WEEKLY PAYROLL RECORDS REPORT
& STATEMENT OF COMPLIANCE

In accordance with Massachusetts General Law c. 149, §27B, a true and accurate record must be kept of all persons employed on the public works project for which the enclosed rates have been provided. A Payroll Form is available from the Department of Labor Standards (DLS) at www.mass.gov/dols/pw and includes all the information required to be kept by law. Every contractor or subcontractor is required to keep these records and preserve them for a period of three years from the date of completion of the contract.

On a weekly basis, every contractor and subcontractor is required to submit a certified copy of their weekly payroll records to the awarding authority; this includes the payroll forms and the Statement of Compliance form. The certified payroll records must be submitted either by regular mail or by e-mail to the awarding authority. Once collected, the awarding authority is required to preserve those records for three years from the date of completion of the project.

Each such contractor and subcontractor shall furnish weekly **and** within 15 days after completion of its portion of the work, to the awarding authority directly by first-class mail or e-mail, a statement, executed by the contractor, subcontractor or by any authorized officer thereof who supervised the payment of wages, this form, accompanied by their payroll:

STATEMENT OF COMPLIANCE

_____, 20_____

I,_____,_____
(Name of signatory party) (Title)

do hereby state:

That I pay or supervise the payment of the persons employed by
_____ on the _____
(Contractor, subcontractor or public body) (Building or project)

and that all mechanics and apprentices, teamsters, chauffeurs and laborers employed on said project have been paid in accordance with wages determined under the provisions of sections twenty-six and twenty-seven of chapter one hundred and forty nine of the General Laws.

Signature _____
Title _____

THE COMMONWEALTH OF MASSACHUSETTS
EXECUTIVE OFFICE OF LABOR AND WORKFORCE DEVELOPMENT
DEPARTMENT OF LABOR STANDARDS

Prevailing Wage Rates

As determined by the Director under the provisions of the Massachusetts General Laws, Chapter 149, Sections 26 to 27H

CHARLES D. BAKER
Governor

KARYN E. POLITO
Lt. Governor

ROSALIN ACOSTA
Secretary

MICHAEL FLANAGAN
Interim Director

Awarding Authority: City of Somerville

Contract Number:

City/Town: SOMERVILLE

Description of Work: IFB#20-56 Sidewalk Repairs - Labor, material and equipment required for the sidewalk repairs

Job Location: Somerville

Information about Prevailing Wage Schedules for Awarding Authorities and Contractors

- This wage schedule applies only to the specific project referenced at the top of this page and uniquely identified by the "Wage Request Number" on all pages of this schedule.
- An Awarding Authority must request an updated wage schedule from the Department of Labor Standards ("DLS") if it has not opened bids or selected a contractor within 90 days of the date of issuance of the wage schedule. For CM AT RISK projects (bid pursuant to G.L. c.149A), the earlier of: (a) the execution date of the GMP Amendment, or (b) the bid for the first construction scope of work must be within 90-days of the wage schedule issuance date.
- The wage schedule shall be incorporated in any advertisement or call for bids for the project as required by M.G.L. c. 149, § 27. The wage schedule shall be made a part of the contract awarded for the project. The wage schedule must be posted in a conspicuous place at the work site for the life of the project in accordance with M.G.L. c. 149 § 27. The wages listed on the wage schedule must be paid to employees performing construction work on the project whether they are employed by the prime contractor, a filed sub-bidder, or any sub-contractor.
- All apprentices working on the project are required to be registered with the Massachusetts Department of Labor Standards, Division of Apprentice Standards (DLS/DAS). Apprentice must keep his/her apprentice identification card on his/her person during all work hours on the project. An apprentice registered with DAS may be paid the lower apprentice wage rate at the applicable step as provided on the prevailing wage schedule. **Any apprentice not registered with DLS/DAS regardless of whether or not they are registered with any other federal, state, local, or private agency must be paid the journeyworker's rate for the trade.**
- The wage rates will remain in effect for the duration of the project, except in the case of multi-year public construction projects. For construction projects lasting longer than one year, awarding authorities must request an updated wage schedule. Awarding authorities are required to request these updates no later than two weeks before the anniversary of the date the contract was executed by the awarding authority and the general contractor. For multi-year CM AT RISK projects, awarding authority must request an annual update no later than two weeks before the anniversary date, determined as the earlier of: (a) the execution date of the GMP Amendment, or (b) the execution date of the first amendment to permit procurement of construction services. Contractors are required to obtain the wage schedules from awarding authorities, and to pay no less than these rates to covered workers. The annual update requirement is not applicable to 27F "rental of equipment" contracts.
- Every contractor or subcontractor which performs construction work on the project is required to submit weekly payroll reports and a Statement of Compliance directly to the awarding authority by mail or email and keep them on file for three years. Each weekly payroll report must contain: the employee's name, address, occupational classification, hours worked, and wages paid. Do not submit weekly payroll reports to DLS. A sample of a payroll reporting form may be obtained at http://www.mass.gov/dols/pw.
- Contractors with questions about the wage rates or classifications included on the wage schedule have an affirmative obligation to inquire with DLS at (617) 626-6953.
- Employees not receiving the prevailing wage rate set forth on the wage schedule may report the violation to the Fair Labor Division of the office of the Attorney General at (617) 727-3465.
- Failure of a contractor or subcontractor to pay the prevailing wage rates listed on the wage schedule to all employees who perform construction work on the project is a violation of the law and subjects the contractor or subcontractor to civil and criminal penalties.

Issue Date: 02/05/2020 **Wage Request Number:** 20200205-048

Classification	Effective Date	Base Wage	Health	Pension	Supplemental Unemployment	Total Rate
Construction						
(2 AXLE) DRIVER - EQUIPMENT *TEAMSTERS JOINT COUNCIL NO. 10 ZONE A*	12/01/2019	$35.35	$12.41	$13.72	$0.00	$61.48
	06/01/2020	$36.25	$12.41	$13.72	$0.00	$62.38
	08/01/2020	$36.25	$12.91	$13.72	$0.00	$62.88
	12/01/2020	$36.25	$12.91	$14.82	$0.00	$63.98
	06/01/2021	$37.05	$12.91	$14.82	$0.00	$64.78
	08/01/2021	$37.05	$13.41	$14.82	$0.00	$65.28
	12/01/2021	$37.05	$13.41	$16.01	$0.00	$66.47
(3 AXLE) DRIVER - EQUIPMENT *TEAMSTERS JOINT COUNCIL NO. 10 ZONE A*	12/01/2019	$35.42	$12.41	$13.72	$0.00	$61.55
	06/01/2020	$36.32	$12.41	$13.72	$0.00	$62.45
	08/01/2020	$36.32	$12.91	$13.72	$0.00	$62.95
	12/01/2020	$36.32	$12.91	$14.82	$0.00	$64.05
	06/01/2021	$37.12	$12.91	$14.82	$0.00	$64.85
	08/01/2021	$37.12	$13.41	$14.82	$0.00	$65.35
	12/01/2021	$37.12	$13.41	$16.01	$0.00	$66.54
(4 & 5 AXLE) DRIVER - EQUIPMENT *TEAMSTERS JOINT COUNCIL NO. 10 ZONE A*	12/01/2019	$35.54	$12.41	$13.72	$0.00	$61.67
	06/01/2020	$36.44	$12.41	$13.72	$0.00	$62.57
	08/01/2020	$36.44	$12.91	$13.72	$0.00	$63.07
	12/01/2020	$36.44	$12.91	$14.82	$0.00	$64.17
	06/01/2021	$37.24	$12.91	$14.82	$0.00	$64.97
	08/01/2021	$37.24	$13.41	$14.82	$0.00	$65.47
	12/01/2021	$37.24	$13.41	$16.01	$0.00	$66.66
ADS/SUBMERSIBLE PILOT *PILE DRIVER LOCAL 56 (ZONE 1)*	08/01/2019	$102.78	$9.90	$21.15	$0.00	$133.83
For apprentice rates see "Apprentice- PILE DRIVER"						
AIR TRACK OPERATOR *LABORERS - ZONE 1*	12/01/2019	$39.90	$8.10	$16.60	$0.00	$64.60
	06/01/2020	$40.89	$8.10	$16.60	$0.00	$65.59
	12/01/2020	$41.87	$8.10	$16.60	$0.00	$66.57
	06/01/2021	$42.89	$8.10	$16.60	$0.00	$67.59
	12/01/2021	$43.90	$8.10	$16.60	$0.00	$68.60
For apprentice rates see "Apprentice- LABORER"						
ASBESTOS REMOVER - PIPE / MECH. EQUIPT. *HEAT & FROST INSULATORS LOCAL 6 (BOSTON)*	12/01/2019	$37.00	$12.50	$8.85	$0.00	$58.35
	06/01/2020	$38.00	$12.50	$8.85	$0.00	$59.35
	12/01/2020	$39.00	$12.50	$8.85	$0.00	$60.35
ASPHALT RAKER *LABORERS - ZONE 1*	12/01/2019	$39.40	$8.10	$16.60	$0.00	$64.10
	06/01/2020	$40.39	$8.10	$16.60	$0.00	$65.09
	12/01/2020	$41.37	$8.10	$16.60	$0.00	$66.07
	06/01/2021	$42.39	$8.10	$16.60	$0.00	$67.09
	12/01/2021	$43.40	$8.10	$16.60	$0.00	$68.10
For apprentice rates see "Apprentice- LABORER"						
ASPHALT/CONCRETE/CRUSHER PLANT-ON SITE *OPERATING ENGINEERS LOCAL 4*	12/01/2019	$48.73	$12.50	$15.70	$0.00	$76.93
	06/01/2020	$49.83	$12.50	$15.70	$0.00	$78.03
	12/01/2020	$50.98	$12.50	$15.70	$0.00	$79.18
	06/01/2021	$52.08	$12.50	$15.70	$0.00	$80.28
	12/01/2021	$53.23	$12.50	$15.70	$0.00	$81.43
For apprentice rates see "Apprentice- OPERATING ENGINEERS"						

Classification	Effective Date	Base Wage	Health	Pension	Supplemental Unemployment	Total Rate
BACKHOE/FRONT-END LOADER *OPERATING ENGINEERS LOCAL 4*	12/01/2019	$48.73	$12.50	$15.70	$0.00	$76.93
	06/01/2020	$49.83	$12.50	$15.70	$0.00	$78.03
	12/01/2020	$50.98	$12.50	$15.70	$0.00	$79.18
	06/01/2021	$52.08	$12.50	$15.70	$0.00	$80.28
	12/01/2021	$53.23	$12.50	$15.70	$0.00	$81.43
For apprentice rates see "Apprentice- OPERATING ENGINEERS"						
BARCO-TYPE JUMPING TAMPER *LABORERS - ZONE 1*	12/01/2019	$39.40	$8.10	$16.60	$0.00	$64.10
	06/01/2020	$40.39	$8.10	$16.60	$0.00	$65.09
	12/01/2020	$41.37	$8.10	$16.60	$0.00	$66.07
	06/01/2021	$42.39	$8.10	$16.60	$0.00	$67.09
	12/01/2021	$43.40	$8.10	$16.60	$0.00	$68.10
For apprentice rates see "Apprentice- LABORER"						
BLOCK PAVER, RAMMER / CURB SETTER *LABORERS - ZONE 1*	12/01/2019	$39.90	$8.10	$16.60	$0.00	$64.60
	06/01/2020	$40.89	$8.10	$16.60	$0.00	$65.59
	12/01/2020	$41.87	$8.10	$16.60	$0.00	$66.57
	06/01/2021	$42.89	$8.10	$16.60	$0.00	$67.59
	12/01/2021	$43.90	$8.10	$16.60	$0.00	$68.60
For apprentice rates see "Apprentice- LABORER"						
BOILER MAKER *BOILERMAKERS LOCAL 29*	01/01/2020	$46.10	$7.07	$17.98	$0.00	$71.15

Apprentice - *BOILERMAKER - Local 29*

Effective Date - 01/01/2020

Step	percent	Apprentice Base Wage	Health	Pension	Supplemental Unemployment	Total Rate
1	65	$29.97	$7.07	$11.69	$0.00	$48.73
2	65	$29.97	$7.07	$11.69	$0.00	$48.73
3	70	$32.27	$7.07	$12.59	$0.00	$51.93
4	75	$34.58	$7.07	$13.49	$0.00	$55.14
5	80	$36.88	$7.07	$14.38	$0.00	$58.33
6	85	$39.19	$7.07	$15.29	$0.00	$61.55
7	90	$41.49	$7.07	$16.18	$0.00	$64.74
8	95	$43.80	$7.07	$17.09	$0.00	$67.96

Notes:

Apprentice to Journeyworker Ratio:1:4

BRICK/STONE/ARTIFICIAL MASONRY (INCL. MASONRY WATERPROOFING) *BRICKLAYERS LOCAL 3 (BOSTON)*	02/01/2020	$54.40	$10.75	$21.94	$0.00	$87.09
	08/01/2020	$55.75	$10.75	$22.09	$0.00	$88.59
	02/01/2021	$56.39	$10.75	$22.09	$0.00	$89.23
	08/01/2021	$57.79	$10.75	$22.25	$0.00	$90.79
	02/01/2022	$58.38	$10.75	$22.25	$0.00	$91.38

Classification	Effective Date	Base Wage	Health	Pension	Supplemental Unemployment	Total Rate

Apprentice - *BRICK/PLASTER/CEMENT MASON - Local 3 Boston*

Effective Date - 02/01/2020

Step	percent	Apprentice Base Wage	Health	Pension	Supplemental Unemployment	Total Rate
1	50	$27.20	$10.75	$21.94	$0.00	$59.89
2	60	$32.64	$10.75	$21.94	$0.00	$65.33
3	70	$38.08	$10.75	$21.94	$0.00	$70.77
4	80	$43.52	$10.75	$21.94	$0.00	$76.21
5	90	$48.96	$10.75	$21.94	$0.00	$81.65

Effective Date - 08/01/2020

Step	percent	Apprentice Base Wage	Health	Pension	Supplemental Unemployment	Total Rate
1	50	$27.88	$10.75	$22.09	$0.00	$60.72
2	60	$33.45	$10.75	$22.09	$0.00	$66.29
3	70	$39.03	$10.75	$22.09	$0.00	$71.87
4	80	$44.60	$10.75	$22.09	$0.00	$77.44
5	90	$50.18	$10.75	$22.09	$0.00	$83.02

Notes:

Apprentice to Journeyworker Ratio:1:5

BULLDOZER/GRADER/SCRAPER *OPERATING ENGINEERS LOCAL 4*	12/01/2019	$48.23	$12.50	$15.70	$0.00	$76.43
	06/01/2020	$49.31	$12.50	$15.70	$0.00	$77.51
	12/01/2020	$50.45	$12.50	$15.70	$0.00	$78.65
	06/01/2021	$51.54	$12.50	$15.70	$0.00	$79.74
	12/01/2021	$52.68	$12.50	$15.70	$0.00	$80.88
For apprentice rates see "Apprentice- OPERATING ENGINEERS"						
CAISSON & UNDERPINNING BOTTOM MAN *LABORERS - FOUNDATION AND MARINE*	12/01/2019	$40.25	$8.10	$16.80	$0.00	$65.15
	06/01/2020	$41.24	$8.10	$16.80	$0.00	$66.14
	12/01/2020	$42.22	$8.10	$16.80	$0.00	$67.12
	06/01/2021	$43.24	$8.10	$16.80	$0.00	$68.14
	12/01/2021	$44.25	$8.10	$16.80	$0.00	$69.15
For apprentice rates see "Apprentice- LABORER"						
CAISSON & UNDERPINNING LABORER *LABORERS - FOUNDATION AND MARINE*	12/01/2019	$39.10	$8.10	$16.80	$0.00	$64.00
	06/01/2020	$40.09	$8.10	$16.80	$0.00	$64.99
	12/01/2020	$41.07	$8.10	$16.80	$0.00	$65.97
	06/01/2021	$42.09	$8.10	$16.80	$0.00	$66.99
	12/01/2021	$43.10	$8.10	$16.80	$0.00	$68.00
For apprentice rates see "Apprentice- LABORER"						
CAISSON & UNDERPINNING TOP MAN *LABORERS - FOUNDATION AND MARINE*	12/01/2019	$39.10	$8.10	$16.80	$0.00	$64.00
	06/01/2020	$40.09	$8.10	$16.80	$0.00	$64.99
	12/01/2020	$41.07	$8.10	$16.80	$0.00	$65.97
	06/01/2021	$42.09	$8.10	$16.80	$0.00	$66.99
	12/01/2021	$43.10	$8.10	$16.80	$0.00	$68.00
For apprentice rates see "Apprentice- LABORER"						

Classification	Effective Date	Base Wage	Health	Pension	Supplemental Unemployment	Total Rate
CARBIDE CORE DRILL OPERATOR *LABORERS - ZONE 1*	12/01/2019	$39.40	$8.10	$16.60	$0.00	$64.10
	06/01/2020	$40.39	$8.10	$16.60	$0.00	$65.09
	12/01/2020	$41.37	$8.10	$16.60	$0.00	$66.07
	06/01/2021	$42.39	$8.10	$16.60	$0.00	$67.09
	12/01/2021	$43.40	$8.10	$16.60	$0.00	$68.10
For apprentice rates see "Apprentice- LABORER"						
CARPENTER *CARPENTERS -ZONE 1 (Metro Boston)*	09/01/2019	$49.79	$9.40	$18.95	$0.00	$78.14
	03/01/2020	$50.64	$9.40	$18.95	$0.00	$78.99
	09/01/2020	$51.54	$9.40	$18.95	$0.00	$79.89
	03/01/2021	$52.39	$9.40	$18.95	$0.00	$80.74
	09/01/2021	$53.29	$9.40	$18.95	$0.00	$81.64
	03/01/2022	$54.14	$9.40	$18.95	$0.00	$82.49
	09/01/2022	$55.04	$9.40	$18.95	$0.00	$83.39
	03/01/2023	$55.89	$9.40	$18.95	$0.00	$84.24

Apprentice - *CARPENTER - Zone 1 Metro Boston*

Effective Date - 09/01/2019

Step	percent	Apprentice Base Wage	Health	Pension	Supplemental Unemployment	Total Rate
1	50	$24.90	$9.40	$1.73	$0.00	$36.03
2	60	$29.87	$9.40	$1.73	$0.00	$41.00
3	70	$34.85	$9.40	$13.76	$0.00	$58.01
4	75	$37.34	$9.40	$13.76	$0.00	$60.50
5	80	$39.83	$9.40	$15.49	$0.00	$64.72
6	80	$39.83	$9.40	$15.49	$0.00	$64.72
7	90	$44.81	$9.40	$17.22	$0.00	$71.43
8	90	$44.81	$9.40	$17.22	$0.00	$71.43

Effective Date - 03/01/2020

Step	percent	Apprentice Base Wage	Health	Pension	Supplemental Unemployment	Total Rate
1	50	$25.32	$9.40	$1.73	$0.00	$36.45
2	60	$30.38	$9.40	$1.73	$0.00	$41.51
3	70	$35.45	$9.40	$13.76	$0.00	$58.61
4	75	$37.98	$9.40	$13.76	$0.00	$61.14
5	80	$40.51	$9.40	$15.49	$0.00	$65.40
6	80	$40.51	$9.40	$15.49	$0.00	$65.40
7	90	$45.58	$9.40	$17.22	$0.00	$72.20
8	90	$45.58	$9.40	$17.22	$0.00	$72.20

Notes:

% Indentured After 10/1/17; 45/45/55/55/70/70/80/80
Step 1&2 $33.54/ 3&4 $40.18/ 5&6 $59.74/ 7&8 $66.45

Apprentice to Journeyworker Ratio:1:5

CARPENTER WOOD FRAME *CARPENTERS -ZONE 1 (Wood Frame)*	10/01/2019	$32.97	$7.07	$7.86	$0.00	$47.90

All Aspects of New Wood Frame Work

Classification	Effective Date	Base Wage	Health	Pension	Supplemental Unemployment	Total Rate

Apprentice - *CARPENTER (Wood Frame) - Zone 1*

Effective Date - 10/01/2019

Step	percent	Apprentice Base Wage	Health	Pension	Supplemental Unemployment	Total Rate
1	60	$19.78	$7.07	$0.00	$0.00	$26.85
2	60	$19.78	$7.07	$0.00	$0.00	$26.85
3	65	$21.43	$7.07	$7.86	$0.00	$36.36
4	70	$23.08	$7.07	$7.86	$0.00	$38.01
5	75	$24.73	$7.07	$7.86	$0.00	$39.66
6	80	$26.38	$7.07	$7.86	$0.00	$41.31
7	85	$28.02	$7.07	$7.86	$0.00	$42.95
8	90	$29.67	$7.07	$7.86	$0.00	$44.60

Notes:

% Indentured After 10/1/17; 45/45/55/55/70/70/80/80
Step 1&2 $21.91/ 3&4 $29.95/ 5&6 $38.01/ 7&8 $41.31

Apprentice to Journeyworker Ratio:1:5

CEMENT MASONRY/PLASTERING *BRICKLAYERS LOCAL 3 (BOSTON)*	01/01/2020	$49.07	$12.75	$22.41	$0.62	$84.85

Apprentice - *CEMENT MASONRY/PLASTERING - Eastern Mass (Boston)*

Effective Date - 01/01/2020

Step	percent	Apprentice Base Wage	Health	Pension	Supplemental Unemployment	Total Rate
1	50	$24.54	$12.75	$15.41	$0.00	$52.70
2	60	$29.44	$12.75	$17.41	$0.62	$60.22
3	65	$31.90	$12.75	$18.41	$0.62	$63.68
4	70	$34.35	$12.75	$19.41	$0.62	$67.13
5	75	$36.80	$12.75	$20.41	$0.62	$70.58
6	80	$39.26	$12.75	$21.41	$0.62	$74.04
7	90	$44.16	$12.75	$22.41	$0.62	$79.94

Notes:

Steps 3,4 are 500 hrs. All other steps are 1,000 hrs.

Apprentice to Journeyworker Ratio:1:3

CHAIN SAW OPERATOR *LABORERS - ZONE 1*	12/01/2019	$39.40	$8.10	$16.60	$0.00	$64.10
	06/01/2020	$40.39	$8.10	$16.60	$0.00	$65.09
	12/01/2020	$41.37	$8.10	$16.60	$0.00	$66.07
	06/01/2021	$42.39	$8.10	$16.60	$0.00	$67.09
	12/01/2021	$43.40	$8.10	$16.60	$0.00	$68.10

For apprentice rates see "Apprentice- LABORER"

CLAM SHELLS/SLURRY BUCKETS/HEADING MACHINES *OPERATING ENGINEERS LOCAL 4*	12/01/2019	$49.73	$12.50	$15.70	$0.00	$77.93
	06/01/2020	$50.83	$12.50	$15.70	$0.00	$79.03
	12/01/2020	$51.98	$12.50	$15.70	$0.00	$80.18
	06/01/2021	$53.08	$12.50	$15.70	$0.00	$81.28
	12/01/2021	$54.23	$12.50	$15.70	$0.00	$82.43

Classification	Effective Date	Base Wage	Health	Pension	Supplemental Unemployment	Total Rate
For apprentice rates see "Apprentice- OPERATING ENGINEERS"						
COMPRESSOR OPERATOR *OPERATING ENGINEERS LOCAL 4*	12/01/2019	$32.47	$12.50	$15.70	$0.00	$60.67
	06/01/2020	$33.22	$12.50	$15.70	$0.00	$61.42
	12/01/2020	$34.00	$12.50	$15.70	$0.00	$62.20
	06/01/2021	$34.75	$12.50	$15.70	$0.00	$62.95
	12/01/2021	$35.54	$12.50	$15.70	$0.00	$63.74
For apprentice rates see "Apprentice- OPERATING ENGINEERS"						
DELEADER (BRIDGE) *PAINTERS LOCAL 35 - ZONE 1*	01/01/2020	$50.96	$8.20	$22.10	$0.00	$81.26
	07/01/2020	$52.06	$8.20	$22.10	$0.00	$82.36
	01/01/2021	$53.16	$8.20	$22.10	$0.00	$83.46

Apprentice - *PAINTER Local 35 - BRIDGES/TANKS*

Effective Date - 01/01/2020

Step	percent	Apprentice Base Wage	Health	Pension	Supplemental Unemployment	Total Rate
1	50	$25.48	$8.20	$0.00	$0.00	$33.68
2	55	$28.03	$8.20	$5.94	$0.00	$42.17
3	60	$30.58	$8.20	$6.48	$0.00	$45.26
4	65	$33.12	$8.20	$7.02	$0.00	$48.34
5	70	$35.67	$8.20	$18.86	$0.00	$62.73
6	75	$38.22	$8.20	$19.40	$0.00	$65.82
7	80	$40.77	$8.20	$19.94	$0.00	$68.91
8	90	$45.86	$8.20	$21.02	$0.00	$75.08

Effective Date - 07/01/2020

Step	percent	Apprentice Base Wage	Health	Pension	Supplemental Unemployment	Total Rate
1	50	$26.03	$8.20	$0.00	$0.00	$34.23
2	55	$28.63	$8.20	$5.94	$0.00	$42.77
3	60	$31.24	$8.20	$6.48	$0.00	$45.92
4	65	$33.84	$8.20	$7.02	$0.00	$49.06
5	70	$36.44	$8.20	$18.86	$0.00	$63.50
6	75	$39.05	$8.20	$19.40	$0.00	$66.65
7	80	$41.65	$8.20	$19.94	$0.00	$69.79
8	90	$46.85	$8.20	$21.02	$0.00	$76.07

Notes:

Steps are 750 hrs.

Apprentice to Journeyworker Ratio:1:1

DEMO: ADZEMAN *LABORERS - ZONE 1*	12/01/2019	$39.30	$8.10	$16.60	$0.00	$64.00
For apprentice rates see "Apprentice- LABORER"						
DEMO: BACKHOE/LOADER/HAMMER OPERATOR *LABORERS - ZONE 1*	12/01/2019	$40.30	$8.10	$16.60	$0.00	$65.00
For apprentice rates see "Apprentice- LABORER"						
DEMO: BURNERS *LABORERS - ZONE 1*	12/01/2019	$40.05	$8.10	$16.60	$0.00	$64.75
For apprentice rates see "Apprentice- LABORER"						

Classification	Effective Date	Base Wage	Health	Pension	Supplemental Unemployment	Total Rate
DEMO: CONCRETE CUTTER/SAWYER *LABORERS - ZONE 1* For apprentice rates see "Apprentice- LABORER"	12/01/2019	$40.30	$8.10	$16.60	$0.00	$65.00
DEMO: JACKHAMMER OPERATOR *LABORERS - ZONE 1* For apprentice rates see "Apprentice- LABORER"	12/01/2019	$40.05	$8.10	$16.60	$0.00	$64.75
DEMO: WRECKING LABORER *LABORERS - ZONE 1* For apprentice rates see "Apprentice- LABORER"	12/01/2019	$39.30	$8.10	$16.60	$0.00	$64.00
DIRECTIONAL DRILL MACHINE OPERATOR *OPERATING ENGINEERS LOCAL 4*	12/01/2019	$48.23	$12.50	$15.70	$0.00	$76.43
	06/01/2020	$49.31	$12.50	$15.70	$0.00	$77.51
	12/01/2020	$50.45	$12.50	$15.70	$0.00	$78.65
	06/01/2021	$51.54	$12.50	$15.70	$0.00	$79.74
	12/01/2021	$52.68	$12.50	$15.70	$0.00	$80.88
For apprentice rates see "Apprentice- OPERATING ENGINEERS"						
DIVER *PILE DRIVER LOCAL 56 (ZONE 1)* For apprentice rates see "Apprentice- PILE DRIVER"	08/01/2019	$68.52	$9.90	$21.15	$0.00	$99.57
DIVER TENDER *PILE DRIVER LOCAL 56 (ZONE 1)* For apprentice rates see "Apprentice- PILE DRIVER"	08/01/2019	$48.94	$9.90	$21.15	$0.00	$79.99
DIVER TENDER (EFFLUENT) *PILE DRIVER LOCAL 56 (ZONE 1)* For apprentice rates see "Apprentice- PILE DRIVER"	08/01/2019	$73.41	$9.90	$21.15	$0.00	$104.46
DIVER/SLURRY (EFFLUENT) *PILE DRIVER LOCAL 56 (ZONE 1)* For apprentice rates see "Apprentice- PILE DRIVER"	08/01/2019	$102.78	$9.90	$21.15	$0.00	$133.83
DRAWBRIDGE OPERATOR (Construction) *ELECTRICIANS LOCAL 103*	09/01/2019	$53.01	$13.00	$18.94	$0.00	$84.95
	03/01/2020	$53.50	$13.00	$19.20	$0.00	$85.70
	09/01/2020	$54.93	$13.00	$19.25	$0.00	$87.18
	03/01/2021	$56.13	$13.00	$19.28	$0.00	$88.41
	09/01/2021	$57.56	$13.00	$19.33	$0.00	$89.89
	03/01/2022	$58.76	$13.00	$19.36	$0.00	$91.12
	09/01/2022	$60.19	$13.00	$19.41	$0.00	$92.60
	03/01/2023	$61.39	$13.00	$19.44	$0.00	$93.83
For apprentice rates see "Apprentice- ELECTRICIAN"						
ELECTRICIAN *ELECTRICIANS LOCAL 103*	09/01/2019	$53.01	$13.00	$18.94	$0.00	$84.95
	03/01/2020	$53.50	$13.00	$19.20	$0.00	$85.70
	09/01/2020	$54.93	$13.00	$19.25	$0.00	$87.18
	03/01/2021	$56.13	$13.00	$19.28	$0.00	$88.41
	09/01/2021	$57.56	$13.00	$19.33	$0.00	$89.89
	03/01/2022	$58.76	$13.00	$19.36	$0.00	$91.12
	09/01/2022	$60.19	$13.00	$19.41	$0.00	$92.60
	03/01/2023	$61.39	$13.00	$19.44	$0.00	$93.83

Classification	Effective Date	Base Wage	Health	Pension	Supplemental Unemployment	Total Rate

Apprentice - *ELECTRICIAN - Local 103*

Effective Date - 09/01/2019

Step	percent	Apprentice Base Wage	Health	Pension	Supplemental Unemployment	Total Rate
1	40	$21.20	$13.00	$0.64	$0.00	$34.84
2	40	$21.20	$13.00	$0.64	$0.00	$34.84
3	45	$23.85	$13.00	$14.37	$0.00	$51.22
4	45	$23.85	$13.00	$14.37	$0.00	$51.22
5	50	$26.51	$13.00	$14.79	$0.00	$54.30
6	55	$29.16	$13.00	$15.20	$0.00	$57.36
7	60	$31.81	$13.00	$15.61	$0.00	$60.42
8	65	$34.46	$13.00	$16.03	$0.00	$63.49
9	70	$37.11	$13.00	$16.44	$0.00	$66.55
10	75	$39.76	$13.00	$16.86	$0.00	$69.62

Effective Date - 03/01/2020

Step	percent	Apprentice Base Wage	Health	Pension	Supplemental Unemployment	Total Rate
1	40	$21.40	$13.00	$0.64	$0.00	$35.04
2	40	$21.40	$13.00	$0.64	$0.00	$35.04
3	45	$24.08	$13.00	$14.62	$0.00	$51.70
4	45	$24.08	$13.00	$14.62	$0.00	$51.70
5	50	$26.75	$13.00	$15.04	$0.00	$54.79
6	55	$29.43	$13.00	$15.46	$0.00	$57.89
7	60	$32.10	$13.00	$15.87	$0.00	$60.97
8	65	$34.78	$13.00	$16.29	$0.00	$64.07
9	70	$37.45	$13.00	$16.70	$0.00	$67.15
10	75	$40.13	$13.00	$17.12	$0.00	$70.25

Notes: :

App Prior 1/1/03; 30/35/40/45/50/55/65/70/75/80

Apprentice to Journeyworker Ratio:2:3***

ELEVATOR CONSTRUCTOR *ELEVATOR CONSTRUCTORS LOCAL 4*	01/01/2020	$61.42	$15.73	$18.41	$0.00	$95.56
	01/01/2021	$63.47	$15.88	$19.31	$0.00	$98.66
	01/01/2022	$65.62	$16.03	$20.21	$0.00	$101.86

Classification	Effective Date	Base Wage	Health	Pension	Supplemental Unemployment	Total Rate

Apprentice - *ELEVATOR CONSTRUCTOR - Local 4*

Effective Date - 01/01/2020

Step	percent	Apprentice Base Wage	Health	Pension	Supplemental Unemployment	Total Rate
1	50	$30.71	$15.73	$0.00	$0.00	$46.44
2	55	$33.78	$15.73	$18.41	$0.00	$67.92
3	65	$39.92	$15.73	$18.41	$0.00	$74.06
4	70	$42.99	$15.73	$18.41	$0.00	$77.13
5	80	$49.14	$15.73	$18.41	$0.00	$83.28

Effective Date - 01/01/2021

Step	percent	Apprentice Base Wage	Health	Pension	Supplemental Unemployment	Total Rate
1	50	$31.74	$15.88	$0.00	$0.00	$47.62
2	55	$34.91	$15.88	$19.31	$0.00	$70.10
3	65	$41.26	$15.88	$19.31	$0.00	$76.45
4	70	$44.43	$15.88	$19.31	$0.00	$79.62
5	80	$50.78	$15.88	$19.31	$0.00	$85.97

Notes:

Steps 1-2 are 6 mos.; Steps 3-5 are 1 year

Apprentice to Journeyworker Ratio:1:1

ELEVATOR CONSTRUCTOR HELPER *ELEVATOR CONSTRUCTORS LOCAL 4*	01/01/2020	$42.99	$15.73	$18.41	$0.00	$77.13
	01/01/2021	$44.43	$15.88	$19.31	$0.00	$79.62
	01/01/2022	$45.93	$16.03	$20.21	$0.00	$82.17
For apprentice rates see "Apprentice - ELEVATOR CONSTRUCTOR"						
FENCE & GUARD RAIL ERECTOR *LABORERS - ZONE 1*	12/01/2019	$39.40	$8.10	$16.60	$0.00	$64.10
	06/01/2020	$40.39	$8.10	$16.60	$0.00	$65.09
	12/01/2020	$41.37	$8.10	$16.60	$0.00	$66.07
	06/01/2021	$42.39	$8.10	$16.60	$0.00	$67.09
	12/01/2021	$43.40	$8.10	$16.60	$0.00	$68.10
For apprentice rates see "Apprentice- LABORER"						
FIELD ENG.INST.PERSON-BLDG,SITE,HVY/HWY *OPERATING ENGINEERS LOCAL 4*	11/01/2019	$44.18	$12.00	$15.60	$0.00	$71.78
	05/01/2020	$45.33	$12.00	$15.60	$0.00	$72.93
	11/01/2020	$46.33	$12.00	$15.60	$0.00	$73.93
	05/01/2021	$47.48	$12.00	$15.60	$0.00	$75.08
	11/01/2021	$48.48	$12.00	$15.60	$0.00	$76.08
	05/01/2022	$49.63	$12.00	$15.60	$0.00	$77.23
For apprentice rates see "Apprentice- OPERATING ENGINEERS"						
FIELD ENG.PARTY CHIEF-BLDG,SITE,HVY/HWY *OPERATING ENGINEERS LOCAL 4*	11/01/2019	$45.68	$12.00	$15.60	$0.00	$73.28
	05/01/2020	$46.83	$12.00	$15.60	$0.00	$74.43
	11/01/2020	$47.84	$12.00	$15.60	$0.00	$75.44
	05/01/2021	$49.00	$12.00	$15.60	$0.00	$76.60
	11/01/2021	$50.01	$12.00	$15.60	$0.00	$77.61
	05/01/2022	$51.17	$12.00	$15.60	$0.00	$78.77
For apprentice rates see "Apprentice- OPERATING ENGINEERS"						

Classification	Effective Date	Base Wage	Health	Pension	Supplemental Unemployment	Total Rate
FIELD ENG.ROD PERSON-BLDG,SITE,HVY/HWY *OPERATING ENGINEERS LOCAL 4*	11/01/2019	$22.57	$12.00	$15.60	$0.00	$50.17
	05/01/2020	$23.24	$12.00	$15.60	$0.00	$50.84
	11/01/2020	$23.83	$12.00	$15.60	$0.00	$51.43
	05/01/2021	$24.51	$12.00	$15.60	$0.00	$52.11
	11/01/2021	$25.11	$12.00	$15.60	$0.00	$52.71
	05/01/2022	$25.78	$12.00	$15.60	$0.00	$53.38
For apprentice rates see "Apprentice- OPERATING ENGINEERS"						
FIRE ALARM INSTALLER *ELECTRICIANS LOCAL 103*	09/01/2019	$53.01	$13.00	$18.94	$0.00	$84.95
	03/01/2020	$53.50	$13.00	$19.20	$0.00	$85.70
	09/01/2020	$54.93	$13.00	$19.25	$0.00	$87.18
	03/01/2021	$56.13	$13.00	$19.28	$0.00	$88.41
	09/01/2021	$57.56	$13.00	$19.33	$0.00	$89.89
	03/01/2022	$58.76	$13.00	$19.36	$0.00	$91.12
	09/01/2022	$60.19	$13.00	$19.41	$0.00	$92.60
	03/01/2023	$61.39	$13.00	$19.44	$0.00	$93.83
For apprentice rates see "Apprentice- ELECTRICIAN"						
FIRE ALARM REPAIR / MAINTENANCE / COMMISSIONING*ELECTRICIANS LOCAL 103*	09/01/2019	$39.76	$13.00	$16.86	$0.00	$69.62
	03/01/2020	$40.13	$13.00	$17.12	$0.00	$70.25
	09/01/2020	$41.20	$13.00	$17.16	$0.00	$71.36
	03/01/2021	$42.66	$13.00	$17.27	$0.00	$72.93
	09/01/2021	$44.32	$13.00	$17.38	$0.00	$74.70
	03/01/2022	$45.83	$13.00	$17.49	$0.00	$76.32
	09/01/2022	$47.55	$13.00	$17.62	$0.00	$78.17
	03/01/2023	$49.11	$13.00	$17.73	$0.00	$79.84
For apprentice rates see "Apprentice- TELECOMMUNICATIONS TECHNICIAN"						
FIREMAN (ASST. ENGINEER) *OPERATING ENGINEERS LOCAL 4*	12/01/2019	$39.89	$12.50	$15.70	$0.00	$68.09
	06/01/2020	$40.80	$12.50	$15.70	$0.00	$69.00
	12/01/2020	$41.75	$12.50	$15.70	$0.00	$69.95
	06/01/2021	$42.66	$12.50	$15.70	$0.00	$70.86
	12/01/2021	$43.61	$12.50	$15.70	$0.00	$71.81
For apprentice rates see "Apprentice- OPERATING ENGINEERS"						
FLAGGER & SIGNALER *LABORERS - ZONE 1*	12/01/2019	$23.50	$8.10	$16.60	$0.00	$48.20
	06/01/2020	$23.50	$8.10	$16.60	$0.00	$48.20
	12/01/2020	$24.50	$8.10	$16.60	$0.00	$49.20
	06/01/2021	$24.50	$8.10	$16.60	$0.00	$49.20
	12/01/2021	$24.50	$8.10	$16.60	$0.00	$49.20
For apprentice rates see "Apprentice- LABORER"						
FLOORCOVERER *FLOORCOVERERS LOCAL 2168 ZONE I*	09/01/2019	$46.25	$9.40	$19.25	$0.00	$74.90
	03/01/2020	$47.05	$9.40	$19.25	$0.00	$75.70
	09/01/2020	$47.85	$9.40	$19.25	$0.00	$76.50
	03/01/2021	$48.65	$9.40	$19.25	$0.00	$77.30
	09/01/2021	$49.45	$9.40	$19.25	$0.00	$78.10
	03/01/2022	$50.25	$9.40	$19.25	$0.00	$78.90

Classification	Effective Date	Base Wage	Health	Pension	Supplemental Unemployment	Total Rate

Apprentice - *FLOORCOVERER - Local 2168 Zone I*

Effective Date - 09/01/2019

Step	percent	Apprentice Base Wage	Health	Pension	Supplemental Unemployment	Total Rate
1	50	$23.13	$9.40	$1.79	$0.00	$34.32
2	55	$25.44	$9.40	$1.79	$0.00	$36.63
3	60	$27.75	$9.40	$13.88	$0.00	$51.03
4	65	$30.06	$9.40	$13.88	$0.00	$53.34
5	70	$32.38	$9.40	$15.67	$0.00	$57.45
6	75	$34.69	$9.40	$15.67	$0.00	$59.76
7	80	$37.00	$9.40	$17.46	$0.00	$63.86
8	85	$39.31	$9.40	$17.46	$0.00	$66.17

Effective Date - 03/01/2020

Step	percent	Apprentice Base Wage	Health	Pension	Supplemental Unemployment	Total Rate
1	50	$23.53	$9.40	$1.79	$0.00	$34.72
2	55	$25.88	$9.40	$1.79	$0.00	$37.07
3	60	$28.23	$9.40	$13.88	$0.00	$51.51
4	65	$30.58	$9.40	$13.88	$0.00	$53.86
5	70	$32.94	$9.40	$15.67	$0.00	$58.01
6	75	$35.29	$9.40	$15.67	$0.00	$60.36
7	80	$37.64	$9.40	$17.46	$0.00	$64.50
8	85	$39.99	$9.40	$17.46	$0.00	$66.85

Notes: Steps are 750 hrs.
% After 09/1/17; 45/45/55/55/70/70/80/80 (1500hr Steps)
Step 1&2 $32.00/ 3&4 $38.36/ 5&6 $57.45/ 7&8 $63.86

Apprentice to Journeyworker Ratio:1:1

FORK LIFT/CHERRY PICKER *OPERATING ENGINEERS LOCAL 4*	12/01/2019	$48.73	$12.50	$15.70	$0.00	$76.93
	06/01/2020	$49.83	$12.50	$15.70	$0.00	$78.03
	12/01/2020	$50.98	$12.50	$15.70	$0.00	$79.18
	06/01/2021	$52.08	$12.50	$15.70	$0.00	$80.28
	12/01/2021	$53.23	$12.50	$15.70	$0.00	$81.43
For apprentice rates see "Apprentice- OPERATING ENGINEERS"						
GENERATOR/LIGHTING PLANT/HEATERS *OPERATING ENGINEERS LOCAL 4*	12/01/2019	$32.47	$12.50	$15.70	$0.00	$60.67
	06/01/2020	$33.22	$12.50	$15.70	$0.00	$61.42
	12/01/2020	$34.00	$12.50	$15.70	$0.00	$62.20
	06/01/2021	$34.75	$12.50	$15.70	$0.00	$62.95
	12/01/2021	$35.54	$12.50	$15.70	$0.00	$63.74
For apprentice rates see "Apprentice- OPERATING ENGINEERS"						
GLAZIER (GLASS PLANK/AIR BARRIER/INTERIOR SYSTEMS) *GLAZIERS LOCAL 35 (ZONE 1)*	01/01/2020	$46.25	$8.20	$22.10	$0.00	$76.55
	07/01/2020	$47.35	$8.20	$22.10	$0.00	$77.65
	01/01/2021	$48.45	$8.20	$22.10	$0.00	$78.75

Classification	Effective Date	Base Wage	Health	Pension	Supplemental Unemployment	Total Rate

Apprentice - *GLAZIER - Local 35 Zone 1*

Effective Date - 01/01/2020

Step	percent	Apprentice Base Wage	Health	Pension	Supplemental Unemployment	Total Rate
1	50	$23.13	$8.20	$0.00	$0.00	$31.33
2	55	$25.44	$8.20	$5.94	$0.00	$39.58
3	60	$27.75	$8.20	$6.48	$0.00	$42.43
4	65	$30.06	$8.20	$7.02	$0.00	$45.28
5	70	$32.38	$8.20	$18.86	$0.00	$59.44
6	75	$34.69	$8.20	$19.40	$0.00	$62.29
7	80	$37.00	$8.20	$19.94	$0.00	$65.14
8	90	$41.63	$8.20	$21.02	$0.00	$70.85

Effective Date - 07/01/2020

Step	percent	Apprentice Base Wage	Health	Pension	Supplemental Unemployment	Total Rate
1	50	$23.68	$8.20	$0.00	$0.00	$31.88
2	55	$26.04	$8.20	$5.94	$0.00	$40.18
3	60	$28.41	$8.20	$6.48	$0.00	$43.09
4	65	$30.78	$8.20	$7.02	$0.00	$46.00
5	70	$33.15	$8.20	$18.86	$0.00	$60.21
6	75	$35.51	$8.20	$19.40	$0.00	$63.11
7	80	$37.88	$8.20	$19.94	$0.00	$66.02
8	90	$42.62	$8.20	$21.02	$0.00	$71.84

Notes:

Steps are 750 hrs.

Apprentice to Journeyworker Ratio:1:1

HOISTING ENGINEER/CRANES/GRADALLS *OPERATING ENGINEERS LOCAL 4*	12/01/2019	$48.73	$12.50	$15.70	$0.00	$76.93
	06/01/2020	$49.83	$12.50	$15.70	$0.00	$78.03
	12/01/2020	$50.98	$12.50	$15.70	$0.00	$79.18
	06/01/2021	$52.08	$12.50	$15.70	$0.00	$80.28
	12/01/2021	$53.23	$12.50	$15.70	$0.00	$81.43

Classification	Effective Date	Base Wage	Health	Pension	Supplemental Unemployment	Total Rate

Apprentice - *OPERATING ENGINEERS - Local 4*

Effective Date - 12/01/2019

Step	percent	Apprentice Base Wage	Health	Pension	Supplemental Unemployment	Total Rate
1	55	$26.80	$12.50	$0.00	$0.00	$39.30
2	60	$29.24	$12.50	$15.70	$0.00	$57.44
3	65	$31.67	$12.50	$15.70	$0.00	$59.87
4	70	$34.11	$12.50	$15.70	$0.00	$62.31
5	75	$36.55	$12.50	$15.70	$0.00	$64.75
6	80	$38.98	$12.50	$15.70	$0.00	$67.18
7	85	$41.42	$12.50	$15.70	$0.00	$69.62
8	90	$43.86	$12.50	$15.70	$0.00	$72.06

Effective Date - 06/01/2020

Step	percent	Apprentice Base Wage	Health	Pension	Supplemental Unemployment	Total Rate
1	55	$27.41	$12.50	$0.00	$0.00	$39.91
2	60	$29.90	$12.50	$15.70	$0.00	$58.10
3	65	$32.39	$12.50	$15.70	$0.00	$60.59
4	70	$34.88	$12.50	$15.70	$0.00	$63.08
5	75	$37.37	$12.50	$15.70	$0.00	$65.57
6	80	$39.86	$12.50	$15.70	$0.00	$68.06
7	85	$42.36	$12.50	$15.70	$0.00	$70.56
8	90	$44.85	$12.50	$15.70	$0.00	$73.05

Notes:

Apprentice to Journeyworker Ratio:1:6

HVAC (DUCTWORK) *SHEETMETAL WORKERS LOCAL 17 - A*	02/01/2020	$49.36	$13.35	$24.12	$2.61	$89.44
	08/01/2020	$50.96	$13.35	$24.12	$2.66	$91.09
	02/01/2021	$52.61	$13.35	$24.12	$2.71	$92.79
	08/01/2021	$54.36	$13.35	$24.12	$2.76	$94.59
	02/01/2022	$56.11	$13.35	$24.12	$2.81	$96.39

For apprentice rates see "Apprentice- SHEET METAL WORKER"

HVAC (ELECTRICAL CONTROLS) *ELECTRICIANS LOCAL 103*	09/01/2019	$53.01	$13.00	$18.94	$0.00	$84.95
	03/01/2020	$53.50	$13.00	$19.20	$0.00	$85.70
	09/01/2020	$54.93	$13.00	$19.25	$0.00	$87.18
	03/01/2021	$56.13	$13.00	$19.28	$0.00	$88.41
	09/01/2021	$57.56	$13.00	$19.33	$0.00	$89.89
	03/01/2022	$58.76	$13.00	$19.36	$0.00	$91.12
	09/01/2022	$60.19	$13.00	$19.41	$0.00	$92.60
	03/01/2023	$61.39	$13.00	$19.44	$0.00	$93.83

For apprentice rates see "Apprentice- ELECTRICIAN"

Classification	Effective Date	Base Wage	Health	Pension	Supplemental Unemployment	Total Rate
HVAC (TESTING AND BALANCING - AIR) *SHEETMETAL WORKERS LOCAL 17 - A*	02/01/2020	$49.36	$13.35	$24.12	$2.61	$89.44
	08/01/2020	$50.96	$13.35	$24.12	$2.66	$91.09
	02/01/2021	$52.61	$13.35	$24.12	$2.71	$92.79
	08/01/2021	$54.36	$13.35	$24.12	$2.76	$94.59
	02/01/2022	$56.11	$13.35	$24.12	$2.81	$96.39
For apprentice rates see "Apprentice- SHEET METAL WORKER"						
HVAC (TESTING AND BALANCING -WATER) *PIPEFITTERS LOCAL 537*	09/01/2019	$54.69	$10.95	$19.74	$0.00	$85.38
	03/01/2020	$56.19	$10.95	$19.74	$0.00	$86.88
	09/01/2020	$57.69	$10.95	$19.74	$0.00	$88.38
	03/01/2021	$59.19	$10.95	$19.74	$0.00	$89.88
For apprentice rates see "Apprentice- PIPEFITTER" or "PLUMBER/PIPEFITTER"						
HVAC MECHANIC *PIPEFITTERS LOCAL 537*	09/01/2019	$54.69	$10.95	$19.74	$0.00	$85.38
	03/01/2020	$56.19	$10.95	$19.74	$0.00	$86.88
	09/01/2020	$57.69	$10.95	$19.74	$0.00	$88.38
	03/01/2021	$59.19	$10.95	$19.74	$0.00	$89.88
For apprentice rates see "Apprentice- PIPEFITTER" or "PLUMBER/PIPEFITTER"						
HYDRAULIC DRILLS *LABORERS - ZONE 1*	12/01/2019	$39.90	$8.10	$16.60	$0.00	$64.60
	06/01/2020	$40.89	$8.10	$16.60	$0.00	$65.59
	12/01/2020	$41.87	$8.10	$16.60	$0.00	$66.57
	06/01/2021	$42.89	$8.10	$16.60	$0.00	$67.59
	12/01/2021	$43.90	$8.10	$16.60	$0.00	$68.60
For apprentice rates see "Apprentice- LABORER"						
INSULATOR (PIPES & TANKS) *HEAT & FROST INSULATORS LOCAL 6 (BOSTON)*	09/01/2019	$48.44	$12.80	$16.40	$0.00	$77.64

Apprentice - *ASBESTOS INSULATOR (Pipes & Tanks) - Local 6 Boston*

Effective Date - 09/01/2019

Step	percent	Apprentice Base Wage	Health	Pension	Supplemental Unemployment	Total Rate
1	50	$24.22	$12.80	$11.90	$0.00	$48.92
2	60	$29.06	$12.80	$12.80	$0.00	$54.66
3	70	$33.91	$12.80	$13.70	$0.00	$60.41
4	80	$38.75	$12.80	$14.60	$0.00	$66.15

Notes:

Steps are 1 year

Apprentice to Journeyworker Ratio:1:4

IRONWORKER/WELDER *IRONWORKERS LOCAL 7 (BOSTON AREA)*	03/16/2019	$46.66	$8.00	$23.50	$0.00	$78.16

Classification	Effective Date	Base Wage	Health	Pension	Supplemental Unemployment	Total Rate

Apprentice - *IRONWORKER - Local 7 Boston*

Effective Date - 03/16/2019

Step	percent	Apprentice Base Wage	Health	Pension	Supplemental Unemployment	Total Rate
1	60	$28.00	$8.00	$23.50	$0.00	$59.50
2	70	$32.66	$8.00	$23.50	$0.00	$64.16
3	75	$35.00	$8.00	$23.50	$0.00	$66.50
4	80	$37.33	$8.00	$23.50	$0.00	$68.83
5	85	$39.66	$8.00	$23.50	$0.00	$71.16
6	90	$41.99	$8.00	$23.50	$0.00	$73.49

Notes:

** Structural 1:6; Ornamental 1:4

Apprentice to Journeyworker Ratio:**

JACKHAMMER & PAVING BREAKER OPERATOR *LABORERS - ZONE 1*	12/01/2019	$39.40	$8.10	$16.60	$0.00	$64.10
	06/01/2020	$40.39	$8.10	$16.60	$0.00	$65.09
	12/01/2020	$41.37	$8.10	$16.60	$0.00	$66.07
	06/01/2021	$42.39	$8.10	$16.60	$0.00	$67.09
	12/01/2021	$43.40	$8.10	$16.60	$0.00	$68.10
For apprentice rates see "Apprentice- LABORER"						
LABORER *LABORERS - ZONE 1*	12/01/2019	$39.15	$8.10	$16.60	$0.00	$63.85
	06/01/2020	$40.14	$8.10	$16.60	$0.00	$64.84
	12/01/2020	$41.12	$8.10	$16.60	$0.00	$65.82
	06/01/2021	$42.14	$8.10	$16.60	$0.00	$66.84
	12/01/2021	$43.15	$8.10	$16.60	$0.00	$67.85

Apprentice - *LABORER - Zone 1*

Effective Date - 12/01/2019

Step	percent	Apprentice Base Wage	Health	Pension	Supplemental Unemployment	Total Rate
1	60	$23.49	$8.10	$16.60	$0.00	$48.19
2	70	$27.41	$8.10	$16.60	$0.00	$52.11
3	80	$31.32	$8.10	$16.60	$0.00	$56.02
4	90	$35.24	$8.10	$16.60	$0.00	$59.94

Effective Date - 06/01/2020

Step	percent	Apprentice Base Wage	Health	Pension	Supplemental Unemployment	Total Rate
1	60	$24.08	$8.10	$16.60	$0.00	$48.78
2	70	$28.10	$8.10	$16.60	$0.00	$52.80
3	80	$32.11	$8.10	$16.60	$0.00	$56.81
4	90	$36.13	$8.10	$16.60	$0.00	$60.83

Notes:

Apprentice to Journeyworker Ratio:1:5

Classification	Effective Date	Base Wage	Health	Pension	Supplemental Unemployment	Total Rate
LABORER: CARPENTER TENDER *LABORERS - ZONE 1*	12/01/2019	$39.15	$8.10	$16.60	$0.00	$63.85
	06/01/2020	$40.14	$8.10	$16.60	$0.00	$64.84
	12/01/2020	$41.12	$8.10	$16.60	$0.00	$65.82
	06/01/2021	$42.14	$8.10	$16.60	$0.00	$66.84
	12/01/2021	$43.15	$8.10	$16.60	$0.00	$67.85
For apprentice rates see "Apprentice- LABORER"						
LABORER: CEMENT FINISHER TENDER *LABORERS - ZONE 1*	12/01/2019	$39.15	$8.10	$16.60	$0.00	$63.85
	06/01/2020	$40.14	$8.10	$16.60	$0.00	$64.84
	12/01/2020	$41.12	$8.10	$16.60	$0.00	$65.82
	06/01/2021	$42.14	$8.10	$16.60	$0.00	$66.84
	12/01/2021	$43.15	$8.10	$16.60	$0.00	$67.85
For apprentice rates see "Apprentice- LABORER"						
LABORER: HAZARDOUS WASTE/ASBESTOS REMOVER *LABORERS - ZONE 1*	12/01/2019	$39.30	$8.10	$16.60	$0.00	$64.00
For apprentice rates see "Apprentice- LABORER"						
LABORER: MASON TENDER *LABORERS - ZONE 1*	12/01/2019	$39.40	$8.10	$16.60	$0.00	$64.10
	06/01/2020	$40.39	$8.10	$16.60	$0.00	$65.09
	12/01/2020	$41.37	$8.10	$16.60	$0.00	$66.07
	06/01/2021	$42.39	$8.10	$16.60	$0.00	$67.09
	12/01/2021	$43.40	$8.10	$16.60	$0.00	$68.10
For apprentice rates see "Apprentice- LABORER"						
LABORER: MULTI-TRADE TENDER *LABORERS - ZONE 1*	12/01/2019	$39.15	$8.10	$16.60	$0.00	$63.85
	06/01/2020	$40.14	$8.10	$16.60	$0.00	$64.84
	12/01/2020	$41.12	$8.10	$16.60	$0.00	$65.82
	06/01/2021	$42.14	$8.10	$16.60	$0.00	$66.84
	12/01/2021	$43.15	$8.10	$16.60	$0.00	$67.85
For apprentice rates see "Apprentice- LABORER"						
LABORER: TREE REMOVER *LABORERS - ZONE 1*	12/01/2019	$39.15	$8.10	$16.60	$0.00	$63.85
	06/01/2020	$40.14	$8.10	$16.60	$0.00	$64.84
	12/01/2020	$41.12	$8.10	$16.60	$0.00	$65.82
	06/01/2021	$42.14	$8.10	$16.60	$0.00	$66.84
	12/01/2021	$43.15	$8.10	$16.60	$0.00	$67.85
This classification applies to all tree work associated with the removal of standing trees, and trimming and removal of branches and limbs when the work is not done for a utility company for the purpose of operation, maintenance or repair of utility company equipment. For apprentice rates see "Apprentice- LABORER"						
LASER BEAM OPERATOR *LABORERS - ZONE 1*	12/01/2019	$39.40	$8.10	$16.60	$0.00	$64.10
	06/01/2020	$40.39	$8.10	$16.60	$0.00	$65.09
	12/01/2020	$41.37	$8.10	$16.60	$0.00	$66.07
	06/01/2021	$42.39	$8.10	$16.60	$0.00	$67.09
	12/01/2021	$43.40	$8.10	$16.60	$0.00	$68.10
For apprentice rates see "Apprentice- LABORER"						
MARBLE & TILE FINISHERS *BRICKLAYERS LOCAL 3 - MARBLE & TILE*	02/01/2020	$41.49	$10.75	$20.12	$0.00	$72.36
	08/01/2020	$42.57	$10.75	$20.27	$0.00	$73.59
	02/01/2021	$43.08	$10.75	$20.27	$0.00	$74.10
	08/01/2021	$44.20	$10.75	$20.43	$0.00	$75.38
	02/01/2022	$44.67	$10.75	$20.43	$0.00	$75.85

Classification	Effective Date	Base Wage	Health	Pension	Supplemental Unemployment	Total Rate

Apprentice - *MARBLE & TILE FINISHER - Local 3 Marble & Tile*

Effective Date - 02/01/2020

Step	percent	Apprentice Base Wage	Health	Pension	Supplemental Unemployment	Total Rate
1	50	$20.75	$10.75	$20.12	$0.00	$51.62
2	60	$24.89	$10.75	$20.12	$0.00	$55.76
3	70	$29.04	$10.75	$20.12	$0.00	$59.91
4	80	$33.19	$10.75	$20.12	$0.00	$64.06
5	90	$37.34	$10.75	$20.12	$0.00	$68.21

Effective Date - 08/01/2020

Step	percent	Apprentice Base Wage	Health	Pension	Supplemental Unemployment	Total Rate
1	50	$21.29	$10.75	$20.27	$0.00	$52.31
2	60	$25.54	$10.75	$20.27	$0.00	$56.56
3	70	$29.80	$10.75	$20.27	$0.00	$60.82
4	80	$34.06	$10.75	$20.27	$0.00	$65.08
5	90	$38.31	$10.75	$20.27	$0.00	$69.33

Notes:

Apprentice to Journeyworker Ratio:1:3

MARBLE MASONS,TILELAYERS & TERRAZZO MECH *BRICKLAYERS LOCAL 3 - MARBLE & TILE*	02/01/2020	$54.42	$10.75	$21.93	$0.00	$87.10
	08/01/2020	$55.77	$10.75	$22.08	$0.00	$88.60
	02/01/2021	$56.41	$10.75	$22.08	$0.00	$89.24
	08/01/2021	$57.81	$10.75	$22.24	$0.00	$90.80
	02/01/2022	$58.38	$10.75	$22.24	$0.00	$91.37

Classification	Effective Date	Base Wage	Health	Pension	Supplemental Unemployment	Total Rate

Apprentice - *MARBLE-TILE-TERRAZZO MECHANIC - Local 3 Marble & Tile*

Effective Date - 02/01/2020

Step	percent	Apprentice Base Wage	Health	Pension	Supplemental Unemployment	Total Rate
1	50	$27.21	$10.75	$21.93	$0.00	$59.89
2	60	$32.65	$10.75	$21.93	$0.00	$65.33
3	70	$38.09	$10.75	$21.93	$0.00	$70.77
4	80	$43.54	$10.75	$21.93	$0.00	$76.22
5	90	$48.98	$10.75	$21.93	$0.00	$81.66

Effective Date - 08/01/2020

Step	percent	Apprentice Base Wage	Health	Pension	Supplemental Unemployment	Total Rate
1	50	$27.89	$10.75	$22.08	$0.00	$60.72
2	60	$33.46	$10.75	$22.08	$0.00	$66.29
3	70	$39.04	$10.75	$22.08	$0.00	$71.87
4	80	$44.62	$10.75	$22.08	$0.00	$77.45
5	90	$50.19	$10.75	$22.08	$0.00	$83.02

Notes:

Apprentice to Journeyworker Ratio:1:5

MECH. SWEEPER OPERATOR (ON CONST. SITES) *OPERATING ENGINEERS LOCAL 4*	12/01/2019	$48.23	$12.50	$15.70	$0.00	$76.43
	06/01/2020	$49.31	$12.50	$15.70	$0.00	$77.51
	12/01/2020	$50.45	$12.50	$15.70	$0.00	$78.65
	06/01/2021	$51.54	$12.50	$15.70	$0.00	$79.74
	12/01/2021	$52.68	$12.50	$15.70	$0.00	$80.88
For apprentice rates see "Apprentice- OPERATING ENGINEERS"						
MECHANICS MAINTENANCE *OPERATING ENGINEERS LOCAL 4*	12/01/2019	$48.23	$12.50	$15.70	$0.00	$76.43
	06/01/2020	$49.31	$12.50	$15.70	$0.00	$77.51
	12/01/2020	$50.45	$12.50	$15.70	$0.00	$78.65
	06/01/2021	$51.54	$12.50	$15.70	$0.00	$79.74
	12/01/2021	$52.68	$12.50	$15.70	$0.00	$80.88
For apprentice rates see "Apprentice- OPERATING ENGINEERS"						
MILLWRIGHT (Zone 1) *MILLWRIGHTS LOCAL 1121 - Zone 1*	04/01/2019	$42.22	$9.90	$18.50	$0.00	$70.62

Classification	Effective Date	Base Wage	Health	Pension	Supplemental Unemployment	Total Rate

Apprentice - *MILLWRIGHT - Local 1121 Zone 1*

Effective Date - 04/01/2019

Step	percent	Apprentice Base Wage	Health	Pension	Supplemental Unemployment	Total Rate
1	55	$23.22	$9.90	$5.31	$0.00	$38.43
2	65	$27.44	$9.90	$15.13	$0.00	$52.47
3	75	$31.67	$9.90	$16.10	$0.00	$57.67
4	85	$35.89	$9.90	$17.06	$0.00	$62.85

Notes:

Steps are 2,000 hours

Apprentice to Journeyworker Ratio:1:5

MORTAR MIXER *LABORERS - ZONE 1*	12/01/2019	$39.40	$8.10	$16.60	$0.00	$64.10
	06/01/2020	$40.39	$8.10	$16.60	$0.00	$65.09
	12/01/2020	$41.37	$8.10	$16.60	$0.00	$66.07
	06/01/2021	$42.39	$8.10	$16.60	$0.00	$67.09
	12/01/2021	$43.40	$8.10	$16.60	$0.00	$68.10
For apprentice rates see "Apprentice- LABORER"						
OILER (OTHER THAN TRUCK CRANES,GRADALLS) *OPERATING ENGINEERS LOCAL 4*	12/01/2019	$23.08	$12.50	$15.70	$0.00	$51.28
	06/01/2020	$23.63	$12.50	$15.70	$0.00	$51.83
	12/01/2020	$24.20	$12.50	$15.70	$0.00	$52.40
	06/01/2021	$24.75	$12.50	$15.70	$0.00	$52.95
	12/01/2021	$25.33	$12.50	$15.70	$0.00	$53.53
For apprentice rates see "Apprentice- OPERATING ENGINEERS"						
OILER (TRUCK CRANES, GRADALLS) *OPERATING ENGINEERS LOCAL 4*	12/01/2019	$27.64	$12.50	$15.70	$0.00	$55.84
	06/01/2020	$28.29	$12.50	$15.70	$0.00	$56.49
	12/01/2020	$28.97	$12.50	$15.70	$0.00	$57.17
	06/01/2021	$29.61	$12.50	$15.70	$0.00	$57.81
	12/01/2021	$30.29	$12.50	$15.70	$0.00	$58.49
For apprentice rates see "Apprentice- OPERATING ENGINEERS"						
OTHER POWER DRIVEN EQUIPMENT - CLASS II *OPERATING ENGINEERS LOCAL 4*	12/01/2019	$48.23	$12.50	$15.70	$0.00	$76.43
	06/01/2020	$49.31	$12.50	$15.70	$0.00	$77.51
	12/01/2020	$50.45	$12.50	$15.70	$0.00	$78.65
	06/01/2021	$51.54	$12.50	$15.70	$0.00	$79.74
	12/01/2021	$52.68	$12.50	$15.70	$0.00	$80.88
For apprentice rates see "Apprentice- OPERATING ENGINEERS"						
PAINTER (BRIDGES/TANKS) *PAINTERS LOCAL 35 - ZONE 1*	01/01/2020	$50.96	$8.20	$22.10	$0.00	$81.26
	07/01/2020	$52.06	$8.20	$22.10	$0.00	$82.36
	01/01/2021	$53.16	$8.20	$22.10	$0.00	$83.46

Classification	Effective Date	Base Wage	Health	Pension	Supplemental Unemployment	Total Rate

Apprentice - *PAINTER Local 35 - BRIDGES/TANKS*

Effective Date - 01/01/2020

Step	percent	Apprentice Base Wage	Health	Pension	Supplemental Unemployment	Total Rate
1	50	$25.48	$8.20	$0.00	$0.00	$33.68
2	55	$28.03	$8.20	$5.94	$0.00	$42.17
3	60	$30.58	$8.20	$6.48	$0.00	$45.26
4	65	$33.12	$8.20	$7.02	$0.00	$48.34
5	70	$35.67	$8.20	$18.86	$0.00	$62.73
6	75	$38.22	$8.20	$19.40	$0.00	$65.82
7	80	$40.77	$8.20	$19.94	$0.00	$68.91
8	90	$45.86	$8.20	$21.02	$0.00	$75.08

Effective Date - 07/01/2020

Step	percent	Apprentice Base Wage	Health	Pension	Supplemental Unemployment	Total Rate
1	50	$26.03	$8.20	$0.00	$0.00	$34.23
2	55	$28.63	$8.20	$5.94	$0.00	$42.77
3	60	$31.24	$8.20	$6.48	$0.00	$45.92
4	65	$33.84	$8.20	$7.02	$0.00	$49.06
5	70	$36.44	$8.20	$18.86	$0.00	$63.50
6	75	$39.05	$8.20	$19.40	$0.00	$66.65
7	80	$41.65	$8.20	$19.94	$0.00	$69.79
8	90	$46.85	$8.20	$21.02	$0.00	$76.07

Notes:

Steps are 750 hrs.

Apprentice to Journeyworker Ratio:1:1

PAINTER (SIGN, PICTORIAL & DISPLAY) *PAINTERS LOCAL 35 - ZONE 1*	06/01/2013	$25.81	$7.07	$7.05	$0.00	$39.93

Classification	Effective Date	Base Wage	Health	Pension	Supplemental Unemployment	Total Rate

Apprentice - *PAINTER SIGN - Local 35 Zone 1*

Effective Date - 06/01/2013

Step	percent	Apprentice Base Wage	Health	Pension	Supplemental Unemployment	Total Rate
1	50	$12.91	$7.07	$0.00	$0.00	$19.98
2	55	$14.20	$7.07	$2.45	$0.00	$23.72
3	60	$15.49	$7.07	$2.45	$0.00	$25.01
4	65	$16.78	$7.07	$2.45	$0.00	$26.30
5	70	$18.07	$7.07	$7.05	$0.00	$32.19
6	75	$19.36	$7.07	$7.05	$0.00	$33.48
7	80	$20.65	$7.07	$7.05	$0.00	$34.77
8	85	$21.94	$7.07	$7.05	$0.00	$36.06
9	90	$23.23	$7.07	$7.05	$0.00	$37.35

Notes:

Steps are 4 mos.

Apprentice to Journeyworker Ratio:1:1

PAINTER (SPRAY OR SANDBLAST, NEW) *	01/01/2020	$47.65	$8.20	$22.10	$0.00	$77.95
* If 30% or more of surfaces to be painted are new construction, NEW paint rate shall be used.*PAINTERS LOCAL 35 - ZONE 1*	07/01/2020	$48.75	$8.20	$22.10	$0.00	$79.05
	01/01/2021	$49.85	$8.20	$22.10	$0.00	$80.15

Classification	Effective Date	Base Wage	Health	Pension	Supplemental Unemployment	Total Rate

Apprentice - *PAINTER Local 35 Zone 1 - Spray/Sandblast - New*

Effective Date - 01/01/2020

Step	percent	Apprentice Base Wage	Health	Pension	Supplemental Unemployment	Total Rate
1	50	$23.83	$8.20	$0.00	$0.00	$32.03
2	55	$26.21	$8.20	$5.94	$0.00	$40.35
3	60	$28.59	$8.20	$6.48	$0.00	$43.27
4	65	$30.97	$8.20	$7.02	$0.00	$46.19
5	70	$33.36	$8.20	$18.86	$0.00	$60.42
6	75	$35.74	$8.20	$19.40	$0.00	$63.34
7	80	$38.12	$8.20	$19.94	$0.00	$66.26
8	90	$42.89	$8.20	$21.02	$0.00	$72.11

Effective Date - 07/01/2020

Step	percent	Apprentice Base Wage	Health	Pension	Supplemental Unemployment	Total Rate
1	50	$24.38	$8.20	$0.00	$0.00	$32.58
2	55	$26.81	$8.20	$5.94	$0.00	$40.95
3	60	$29.25	$8.20	$6.48	$0.00	$43.93
4	65	$31.69	$8.20	$7.02	$0.00	$46.91
5	70	$34.13	$8.20	$18.86	$0.00	$61.19
6	75	$36.56	$8.20	$19.40	$0.00	$64.16
7	80	$39.00	$8.20	$19.94	$0.00	$67.14
8	90	$43.88	$8.20	$21.02	$0.00	$73.10

Notes:

Steps are 750 hrs.

Apprentice to Journeyworker Ratio:1:1

PAINTER (SPRAY OR SANDBLAST, REPAINT) *PAINTERS LOCAL 35 - ZONE 1*	01/01/2020	$45.71	$8.20	$22.10	$0.00	$76.01
	07/01/2020	$46.81	$8.20	$22.10	$0.00	$77.11
	01/01/2021	$47.91	$8.20	$22.10	$0.00	$78.21

Classification	Effective Date	Base Wage	Health	Pension	Supplemental Unemployment	Total Rate

Apprentice - *PAINTER Local 35 Zone 1 - Spray/Sandblast - Repaint*

Effective Date - 01/01/2020

Step	percent	Apprentice Base Wage	Health	Pension	Supplemental Unemployment	Total Rate
1	50	$22.86	$8.20	$0.00	$0.00	$31.06
2	55	$25.14	$8.20	$5.94	$0.00	$39.28
3	60	$27.43	$8.20	$6.48	$0.00	$42.11
4	65	$29.71	$8.20	$7.02	$0.00	$44.93
5	70	$32.00	$8.20	$18.86	$0.00	$59.06
6	75	$34.28	$8.20	$19.40	$0.00	$61.88
7	80	$36.57	$8.20	$19.94	$0.00	$64.71
8	90	$41.14	$8.20	$21.02	$0.00	$70.36

Effective Date - 07/01/2020

Step	percent	Apprentice Base Wage	Health	Pension	Supplemental Unemployment	Total Rate
1	50	$23.41	$8.20	$0.00	$0.00	$31.61
2	55	$25.75	$8.20	$5.94	$0.00	$39.89
3	60	$28.09	$8.20	$6.48	$0.00	$42.77
4	65	$30.43	$8.20	$7.02	$0.00	$45.65
5	70	$32.77	$8.20	$18.86	$0.00	$59.83
6	75	$35.11	$8.20	$19.40	$0.00	$62.71
7	80	$37.45	$8.20	$19.94	$0.00	$65.59
8	90	$42.13	$8.20	$21.02	$0.00	$71.35

Notes:

Steps are 750 hrs.

Apprentice to Journeyworker Ratio:1:1

PAINTER (TRAFFIC MARKINGS) *LABORERS - ZONE 1*	12/01/2019	$39.15	$8.10	$16.60	$0.00	$63.85
	06/01/2020	$40.14	$8.10	$16.60	$0.00	$64.84
	12/01/2020	$41.12	$8.10	$16.60	$0.00	$65.82
	06/01/2021	$42.14	$8.10	$16.60	$0.00	$66.84
	12/01/2021	$43.15	$8.10	$16.60	$0.00	$67.85
For Apprentice rates see "Apprentice- LABORER"						
PAINTER / TAPER (BRUSH, NEW) * * If 30% or more of surfaces to be painted are new construction, NEW paint rate shall be used.*PAINTERS LOCAL 35 - ZONE 1*	01/01/2020	$46.25	$8.20	$22.10	$0.00	$76.55
	07/01/2020	$47.35	$8.20	$22.10	$0.00	$77.65
	01/01/2021	$48.45	$8.20	$22.10	$0.00	$78.75

Classification	Effective Date	Base Wage	Health	Pension	Supplemental Unemployment	Total Rate

Apprentice - *PAINTER - Local 35 Zone 1 - BRUSH NEW*

Effective Date - 01/01/2020

Step	percent	Apprentice Base Wage	Health	Pension	Supplemental Unemployment	Total Rate
1	50	$23.13	$8.20	$0.00	$0.00	$31.33
2	55	$25.44	$8.20	$5.94	$0.00	$39.58
3	60	$27.75	$8.20	$6.48	$0.00	$42.43
4	65	$30.06	$8.20	$7.02	$0.00	$45.28
5	70	$32.38	$8.20	$18.86	$0.00	$59.44
6	75	$34.69	$8.20	$19.40	$0.00	$62.29
7	80	$37.00	$8.20	$19.94	$0.00	$65.14
8	90	$41.63	$8.20	$21.02	$0.00	$70.85

Effective Date - 07/01/2020

Step	percent	Apprentice Base Wage	Health	Pension	Supplemental Unemployment	Total Rate
1	50	$23.68	$8.20	$0.00	$0.00	$31.88
2	55	$26.04	$8.20	$5.94	$0.00	$40.18
3	60	$28.41	$8.20	$6.48	$0.00	$43.09
4	65	$30.78	$8.20	$7.02	$0.00	$46.00
5	70	$33.15	$8.20	$18.86	$0.00	$60.21
6	75	$35.51	$8.20	$19.40	$0.00	$63.11
7	80	$37.88	$8.20	$19.94	$0.00	$66.02
8	90	$42.62	$8.20	$21.02	$0.00	$71.84

Notes:

Steps are 750 hrs.

Apprentice to Journeyworker Ratio:1:1

PAINTER / TAPER (BRUSH, REPAINT) *PAINTERS LOCAL 35 - ZONE 1*	01/01/2020	$44.31	$8.20	$22.10	$0.00	$74.61
	07/01/2020	$45.41	$8.20	$22.10	$0.00	$75.71
	01/01/2021	$46.51	$8.20	$22.10	$0.00	$76.81

Classification	Effective Date	Base Wage	Health	Pension	Supplemental Unemployment	Total Rate

Apprentice - *PAINTER Local 35 Zone 1 - BRUSH REPAINT*

Effective Date - 01/01/2020

Step	percent	Apprentice Base Wage	Health	Pension	Supplemental Unemployment	Total Rate
1	50	$22.16	$8.20	$0.00	$0.00	$30.36
2	55	$24.37	$8.20	$5.94	$0.00	$38.51
3	60	$26.59	$8.20	$6.48	$0.00	$41.27
4	65	$28.80	$8.20	$7.02	$0.00	$44.02
5	70	$31.02	$8.20	$18.86	$0.00	$58.08
6	75	$33.23	$8.20	$19.40	$0.00	$60.83
7	80	$35.45	$8.20	$19.94	$0.00	$63.59
8	90	$39.88	$8.20	$21.02	$0.00	$69.10

Effective Date - 07/01/2020

Step	percent	Apprentice Base Wage	Health	Pension	Supplemental Unemployment	Total Rate
1	50	$22.71	$8.20	$0.00	$0.00	$30.91
2	55	$24.98	$8.20	$5.94	$0.00	$39.12
3	60	$27.25	$8.20	$6.48	$0.00	$41.93
4	65	$29.52	$8.20	$7.02	$0.00	$44.74
5	70	$31.79	$8.20	$18.86	$0.00	$58.85
6	75	$34.06	$8.20	$19.40	$0.00	$61.66
7	80	$36.33	$8.20	$19.94	$0.00	$64.47
8	90	$40.87	$8.20	$21.02	$0.00	$70.09

Notes:

Steps are 750 hrs.

Apprentice to Journeyworker Ratio:1:1

PANEL & PICKUP TRUCKS DRIVER *TEAMSTERS JOINT COUNCIL NO. 10 ZONE A*	12/01/2019	$35.18	$12.41	$13.72	$0.00	$61.31
	06/01/2020	$36.08	$12.41	$13.72	$0.00	$62.21
	08/01/2020	$36.08	$12.91	$13.72	$0.00	$62.71
	12/01/2020	$36.08	$12.91	$14.82	$0.00	$63.81
	06/01/2021	$36.88	$12.91	$14.82	$0.00	$64.61
	08/01/2021	$36.88	$13.41	$14.82	$0.00	$65.11
	12/01/2021	$36.88	$13.41	$16.01	$0.00	$66.30
PIER AND DOCK CONSTRUCTOR (UNDERPINNING AND DECK) *PILE DRIVER LOCAL 56 (ZONE 1)* For apprentice rates see "Apprentice- PILE DRIVER"	08/01/2019	$48.94	$9.90	$21.15	$0.00	$79.99
PILE DRIVER *PILE DRIVER LOCAL 56 (ZONE 1)*	08/01/2019	$48.94	$9.90	$21.15	$0.00	$79.99

Classification	Effective Date	Base Wage	Health	Pension	Supplemental Unemployment	Total Rate

Apprentice - *PILE DRIVER - Local 56 Zone 1*

Effective Date - 08/01/2019

Step	percent	Apprentice Base Wage	Health	Pension	Supplemental Unemployment	Total Rate
1	50	$24.47	$9.90	$21.15	$0.00	$55.52
2	60	$29.36	$9.90	$21.15	$0.00	$60.41
3	70	$34.26	$9.90	$21.15	$0.00	$65.31
4	75	$36.71	$9.90	$21.15	$0.00	$67.76
5	80	$39.15	$9.90	$21.15	$0.00	$70.20
6	80	$39.15	$9.90	$21.15	$0.00	$70.20
7	90	$44.05	$9.90	$21.15	$0.00	$75.10
8	90	$44.05	$9.90	$21.15	$0.00	$75.10

Notes:

Apprentice to Journeyworker Ratio:1:5

PIPEFITTER & STEAMFITTER *PIPEFITTERS LOCAL 537*	09/01/2019	$54.69	$10.95	$19.74	$0.00	$85.38
	03/01/2020	$56.19	$10.95	$19.74	$0.00	$86.88
	09/01/2020	$57.69	$10.95	$19.74	$0.00	$88.38
	03/01/2021	$59.19	$10.95	$19.74	$0.00	$89.88

Apprentice - *PIPEFITTER - Local 537*

Effective Date - 09/01/2019

Step	percent	Apprentice Base Wage	Health	Pension	Supplemental Unemployment	Total Rate
1	40	$21.88	$10.95	$8.00	$0.00	$40.83
2	45	$24.61	$10.95	$19.74	$0.00	$55.30
3	60	$32.81	$10.95	$19.74	$0.00	$63.50
4	70	$38.28	$10.95	$19.74	$0.00	$68.97
5	80	$43.75	$10.95	$19.74	$0.00	$74.44

Effective Date - 03/01/2020

Step	percent	Apprentice Base Wage	Health	Pension	Supplemental Unemployment	Total Rate
1	40	$22.48	$10.95	$8.00	$0.00	$41.43
2	45	$25.29	$10.95	$19.74	$0.00	$55.98
3	60	$33.71	$10.95	$19.74	$0.00	$64.40
4	70	$39.33	$10.95	$19.74	$0.00	$70.02
5	80	$44.95	$10.95	$19.74	$0.00	$75.64

Notes:

** 1:3; 3:15; 1:10 thereafter / Steps are 1 yr.
Refrig/AC Mechanic **1:1;1:2;2:4;3:6;4:8;5:10;6:12;7:14;8:17;9:20;10:23(Max)

Apprentice to Journeyworker Ratio:**

Classification	Effective Date	Base Wage	Health	Pension	Supplemental Unemployment	Total Rate
PIPELAYER *LABORERS - ZONE 1*	12/01/2019	$39.40	$8.10	$16.60	$0.00	$64.10
	06/01/2020	$40.39	$8.10	$16.60	$0.00	$65.09
	12/01/2020	$41.37	$8.10	$16.60	$0.00	$66.07
	06/01/2021	$42.39	$8.10	$16.60	$0.00	$67.09
	12/01/2021	$43.40	$8.10	$16.60	$0.00	$68.10
For apprentice rates see "Apprentice- LABORER"						
PLUMBERS & GASFITTERS *PLUMBERS & GASFITTERS LOCAL 12*	09/01/2019	$57.69	$11.82	$17.01	$0.00	$86.52
	03/01/2020	$59.19	$11.82	$17.01	$0.00	$88.02
	09/01/2020	$60.69	$11.82	$17.01	$0.00	$89.52
	03/01/2021	$62.19	$11.82	$17.01	$0.00	$91.02

Apprentice - *PLUMBER/GASFITTER - Local 12*

Effective Date - 09/01/2019

Step	percent	Apprentice Base Wage	Health	Pension	Supplemental Unemployment	Total Rate
1	35	$20.19	$11.82	$6.16	$0.00	$38.17
2	40	$23.08	$11.82	$6.99	$0.00	$41.89
3	55	$31.73	$11.82	$9.53	$0.00	$53.08
4	65	$37.50	$11.82	$11.18	$0.00	$60.50
5	75	$43.27	$11.82	$12.88	$0.00	$67.97

Effective Date - 03/01/2020

Step	percent	Apprentice Base Wage	Health	Pension	Supplemental Unemployment	Total Rate
1	35	$20.72	$11.82	$6.16	$0.00	$38.70
2	40	$23.68	$11.82	$6.99	$0.00	$42.49
3	55	$32.55	$11.82	$9.53	$0.00	$53.90
4	65	$38.47	$11.82	$11.18	$0.00	$61.47
5	75	$44.39	$11.82	$12.88	$0.00	$69.09

Notes:

** 1:2; 2:6; 3:10; 4:14; 5:19/Steps are 1 yr
Step4 with lic$64.20, Step5 with lic$71.67

Apprentice to Journeyworker Ratio:**

PNEUMATIC CONTROLS (TEMP.) *PIPEFITTERS LOCAL 537*	09/01/2019	$54.69	$10.95	$19.74	$0.00	$85.38
	03/01/2020	$56.19	$10.95	$19.74	$0.00	$86.88
	09/01/2020	$57.69	$10.95	$19.74	$0.00	$88.38
	03/01/2021	$59.17	$10.95	$19.74	$0.00	$89.86
For apprentice rates see "Apprentice- PIPEFITTER" or "PLUMBER/PIPEFITTER"						
PNEUMATIC DRILL/TOOL OPERATOR *LABORERS - ZONE 1*	12/01/2019	$39.40	$8.10	$16.60	$0.00	$64.10
	06/01/2020	$40.39	$8.10	$16.60	$0.00	$65.09
	12/01/2020	$41.37	$8.10	$16.60	$0.00	$66.07
	06/01/2021	$42.39	$8.10	$16.60	$0.00	$67.09
	12/01/2021	$43.40	$8.10	$16.60	$0.00	$68.10
For apprentice rates see "Apprentice- LABORER"						

Classification	Effective Date	Base Wage	Health	Pension	Supplemental Unemployment	Total Rate
POWDERMAN & BLASTER *LABORERS - ZONE 1*	12/01/2019	$40.15	$8.10	$16.60	$0.00	$64.85
	06/01/2020	$41.14	$8.10	$16.60	$0.00	$65.84
	12/01/2020	$42.12	$8.10	$16.60	$0.00	$66.82
	06/01/2021	$43.14	$8.10	$16.60	$0.00	$67.84
	12/01/2021	$44.15	$8.10	$16.60	$0.00	$68.85
For apprentice rates see "Apprentice- LABORER"						
POWER SHOVEL/DERRICK/TRENCHING MACHINE *OPERATING ENGINEERS LOCAL 4*	12/01/2019	$48.73	$12.50	$15.70	$0.00	$76.93
	06/01/2020	$49.83	$12.50	$15.70	$0.00	$78.03
	12/01/2020	$50.98	$12.50	$15.70	$0.00	$79.18
	06/01/2021	$52.08	$12.50	$15.70	$0.00	$80.28
	12/01/2021	$53.23	$12.50	$15.70	$0.00	$81.43
For apprentice rates see "Apprentice- OPERATING ENGINEERS"						
PUMP OPERATOR (CONCRETE) *OPERATING ENGINEERS LOCAL 4*	12/01/2019	$48.73	$12.50	$15.70	$0.00	$76.93
	06/01/2020	$49.83	$12.50	$15.70	$0.00	$78.03
	12/01/2020	$50.98	$12.50	$15.70	$0.00	$79.18
	06/01/2021	$52.08	$12.50	$15.70	$0.00	$80.28
	12/01/2021	$53.23	$12.50	$15.70	$0.00	$81.43
For apprentice rates see "Apprentice- OPERATING ENGINEERS"						
PUMP OPERATOR (DEWATERING, OTHER) *OPERATING ENGINEERS LOCAL 4*	12/01/2019	$32.47	$12.50	$15.70	$0.00	$60.67
	06/01/2020	$33.22	$12.50	$15.70	$0.00	$61.42
	12/01/2020	$34.00	$12.50	$15.70	$0.00	$62.20
	06/01/2021	$34.75	$12.50	$15.70	$0.00	$62.95
	12/01/2021	$35.54	$12.50	$15.70	$0.00	$63.74
For apprentice rates see "Apprentice- OPERATING ENGINEERS"						
READY MIX CONCRETE DRIVERS after 4/30/12 (Drivers Hired After 4/30/2012)*TEAMSTERS 25 (Metro) - Aggregate*	08/01/2019	$26.65	$10.41	$13.07	$0.00	$50.13
	05/01/2020	$27.90	$10.41	$14.12	$0.00	$52.43
	08/01/2020	$27.90	$10.91	$14.12	$0.00	$52.93
	05/01/2021	$29.15	$10.91	$15.25	$0.00	$55.31
	08/01/2021	$29.15	$11.41	$15.25	$0.00	$55.81
	05/01/2022	$30.40	$11.41	$15.25	$0.00	$57.06
	08/01/2022	$30.40	$11.91	$15.25	$0.00	$57.56
READY-MIX CONCRETE DRIVER *TEAMSTERS 25 (Metro) - Aggregate*	08/01/2019	$32.16	$10.41	$13.07	$0.00	$55.64
	05/01/2020	$32.91	$10.41	$14.12	$0.00	$57.44
	08/01/2020	$32.91	$10.91	$14.12	$0.00	$57.94
	05/01/2021	$33.66	$10.91	$15.25	$0.00	$59.82
	08/01/2021	$33.66	$11.41	$15.25	$0.00	$60.32
	05/01/2022	$34.41	$11.41	$15.25	$0.00	$61.07
	08/01/2022	$34.41	$11.91	$15.25	$0.00	$61.57
RECLAIMERS *OPERATING ENGINEERS LOCAL 4*	12/01/2019	$48.23	$12.50	$15.70	$0.00	$76.43
	06/01/2020	$49.31	$12.50	$15.70	$0.00	$77.51
	12/01/2020	$50.45	$12.50	$15.70	$0.00	$78.65
	06/01/2021	$51.54	$12.50	$15.70	$0.00	$79.74
	12/01/2021	$52.68	$12.50	$15.70	$0.00	$80.88
For apprentice rates see "Apprentice- OPERATING ENGINEERS"						

Classification	Effective Date	Base Wage	Health	Pension	Supplemental Unemployment	Total Rate
RIDE-ON MOTORIZED BUGGY OPERATOR *LABORERS - ZONE 1*	12/01/2019	$39.40	$8.10	$16.60	$0.00	$64.10
	06/01/2020	$40.39	$8.10	$16.60	$0.00	$65.09
	12/01/2020	$41.37	$8.10	$16.60	$0.00	$66.07
	06/01/2021	$42.39	$8.10	$16.60	$0.00	$67.09
	12/01/2021	$43.40	$8.10	$16.60	$0.00	$68.10
For apprentice rates see "Apprentice- LABORER"						
ROLLER/SPREADER/MULCHING MACHINE *OPERATING ENGINEERS LOCAL 4*	12/01/2019	$48.23	$12.50	$15.70	$0.00	$76.43
	06/01/2020	$49.31	$12.50	$15.70	$0.00	$77.51
	12/01/2020	$50.45	$12.50	$15.70	$0.00	$78.65
	06/01/2021	$51.54	$12.50	$15.70	$0.00	$79.74
	12/01/2021	$52.68	$12.50	$15.70	$0.00	$80.88
For apprentice rates see "Apprentice- OPERATING ENGINEERS"						
ROOFER (Inc.Roofer Waterproofng &Roofer Damproofg) *ROOFERS LOCAL 33*	02/01/2020	$45.92	$11.50	$15.90	$0.00	$73.32
	08/01/2020	$47.35	$11.50	$15.90	$0.00	$74.75
	02/01/2021	$48.78	$11.50	$15.90	$0.00	$76.18
	08/01/2021	$50.21	$11.50	$15.90	$0.00	$77.61
	02/01/2022	$51.64	$11.50	$15.90	$0.00	$79.04

Apprentice - *ROOFER - Local 33*

Effective Date - 02/01/2020

Step	percent	Apprentice Base Wage	Health	Pension	Supplemental Unemployment	Total Rate
1	50	$22.96	$11.50	$3.69	$0.00	$38.15
2	60	$27.55	$11.50	$15.90	$0.00	$54.95
3	65	$29.85	$11.50	$15.90	$0.00	$57.25
4	75	$34.44	$11.50	$15.90	$0.00	$61.84
5	85	$39.03	$11.50	$15.90	$0.00	$66.43

Effective Date - 08/01/2020

Step	percent	Apprentice Base Wage	Health	Pension	Supplemental Unemployment	Total Rate
1	50	$23.68	$11.50	$3.69	$0.00	$38.87
2	60	$28.41	$11.50	$15.90	$0.00	$55.81
3	65	$30.78	$11.50	$15.90	$0.00	$58.18
4	75	$35.51	$11.50	$15.90	$0.00	$62.91
5	85	$40.25	$11.50	$15.90	$0.00	$67.65

Notes: ** 1:5, 2:6-10, the 1:10; Reroofing: 1:4, then 1:1
Step 1 is 2000 hrs.; Steps 2-5 are 1000 hrs.
(Hot Pitch Mechanics' receive $1.00 hr. above ROOFER)

Apprentice to Journeyworker Ratio:**

ROOFER SLATE / TILE / PRECAST CONCRETE *ROOFERS LOCAL 33*	02/01/2020	$46.17	$11.50	$15.90	$0.00	$73.57
	08/01/2020	$47.60	$11.50	$15.90	$0.00	$75.00
	02/01/2021	$49.03	$11.50	$15.90	$0.00	$76.43
	08/01/2021	$50.46	$11.50	$15.90	$0.00	$77.86
	02/01/2022	$51.89	$11.50	$15.90	$0.00	$79.29
For apprentice rates see "Apprentice- ROOFER"						

Classification	Effective Date	Base Wage	Health	Pension	Supplemental Unemployment	Total Rate
SHEETMETAL WORKER *SHEETMETAL WORKERS LOCAL 17 - A*	02/01/2020	$49.36	$13.35	$24.12	$2.61	$89.44
	08/01/2020	$50.96	$13.35	$24.12	$2.66	$91.09
	02/01/2021	$52.61	$13.35	$24.12	$2.71	$92.79
	08/01/2021	$54.36	$13.35	$24.12	$2.76	$94.59
	02/01/2022	$56.11	$13.35	$24.12	$2.81	$96.39

Apprentice - *SHEET METAL WORKER - Local 17-A*

Effective Date - 02/01/2020

Step	percent	Apprentice Base Wage	Health	Pension	Supplemental Unemployment	Total Rate
1	42	$20.73	$13.35	$5.89	$0.00	$39.97
2	42	$20.73	$13.35	$5.89	$0.00	$39.97
3	47	$23.20	$13.35	$11.13	$1.43	$49.11
4	47	$23.20	$13.35	$11.13	$1.43	$49.11
5	52	$25.67	$13.35	$12.08	$1.53	$52.63
6	52	$25.67	$13.35	$12.33	$1.54	$52.89
7	60	$29.62	$13.35	$13.70	$1.70	$58.37
8	65	$32.08	$13.35	$15.15	$1.80	$62.38
9	75	$37.02	$13.35	$16.56	$2.01	$68.94
10	85	$41.96	$13.35	$17.96	$2.20	$75.47

Effective Date - 08/01/2020

Step	percent	Apprentice Base Wage	Health	Pension	Supplemental Unemployment	Total Rate
1	42	$21.40	$13.35	$5.89	$0.00	$40.64
2	42	$21.40	$13.35	$5.89	$0.00	$40.64
3	47	$23.95	$13.35	$11.13	$1.45	$49.88
4	47	$23.95	$13.35	$11.13	$1.45	$49.88
5	52	$26.50	$13.35	$12.08	$1.56	$53.49
6	52	$26.50	$13.35	$12.33	$1.57	$53.75
7	60	$30.58	$13.35	$13.70	$1.73	$59.36
8	65	$33.12	$13.35	$15.15	$1.85	$63.47
9	75	$38.22	$13.35	$16.56	$2.04	$70.17
10	85	$43.32	$13.35	$17.96	$2.24	$76.87

Notes:

Steps are 6 mos.

Apprentice to Journeyworker Ratio:1:4

SPECIALIZED EARTH MOVING EQUIP < 35 TONS *TEAMSTERS JOINT COUNCIL NO. 10 ZONE A*	12/01/2019	$35.64	$12.41	$13.72	$0.00	$61.77
	06/01/2020	$36.54	$12.41	$13.72	$0.00	$62.67
	08/01/2020	$36.54	$12.91	$13.72	$0.00	$63.17
	12/01/2020	$36.54	$12.91	$14.82	$0.00	$64.27
	06/01/2021	$37.34	$12.91	$14.82	$0.00	$65.07
	08/01/2021	$37.34	$13.41	$14.82	$0.00	$65.57
	12/01/2021	$37.34	$13.41	$16.01	$0.00	$66.76

Classification	Effective Date	Base Wage	Health	Pension	Supplemental Unemployment	Total Rate
SPECIALIZED EARTH MOVING EQUIP > 35 TONS *TEAMSTERS JOINT COUNCIL NO. 10 ZONE A*	12/01/2019	$35.93	$12.41	$13.72	$0.00	$62.06
	06/01/2020	$36.83	$12.41	$13.72	$0.00	$62.96
	08/01/2020	$36.83	$12.91	$13.72	$0.00	$63.46
	12/01/2020	$36.83	$12.91	$14.82	$0.00	$64.56
	06/01/2021	$37.63	$12.91	$14.82	$0.00	$65.36
	08/01/2021	$37.63	$13.41	$14.82	$0.00	$65.86
	12/01/2021	$37.63	$13.41	$16.01	$0.00	$67.05
SPRINKLER FITTER *SPRINKLER FITTERS LOCAL 550 - (Section A) Zone 1*	01/01/2020	$60.07	$9.68	$19.80	$0.00	$89.55
	03/01/2020	$61.98	$9.47	$19.60	$0.00	$91.05
	10/01/2020	$63.48	$9.47	$19.60	$0.00	$92.55
	03/01/2021	$64.98	$9.47	$19.60	$0.00	$94.05

Apprentice - *SPRINKLER FITTER - Local 550 (Section A) Zone 1*

Effective Date - 01/01/2020

Step	percent	Apprentice Base Wage	Health	Pension	Supplemental Unemployment	Total Rate
1	35	$21.02	$9.68	$11.35	$0.00	$42.05
2	40	$24.03	$9.68	$12.00	$0.00	$45.71
3	45	$27.03	$9.68	$12.65	$0.00	$49.36
4	50	$30.04	$9.68	$13.30	$0.00	$53.02
5	55	$33.04	$9.68	$13.95	$0.00	$56.67
6	60	$36.04	$9.68	$14.60	$0.00	$60.32
7	65	$39.05	$9.68	$15.25	$0.00	$63.98
8	70	$42.05	$9.68	$15.90	$0.00	$67.63
9	75	$45.05	$9.68	$16.55	$0.00	$71.28
10	80	$48.06	$9.68	$17.20	$0.00	$74.94

Effective Date - 03/01/2020

Step	percent	Apprentice Base Wage	Health	Pension	Supplemental Unemployment	Total Rate
1	35	$21.69	$9.47	$11.15	$0.00	$42.31
2	40	$24.79	$9.47	$11.80	$0.00	$46.06
3	45	$27.89	$9.47	$12.45	$0.00	$49.81
4	50	$30.99	$9.47	$13.10	$0.00	$53.56
5	55	$34.09	$9.47	$13.75	$0.00	$57.31
6	60	$37.19	$9.47	$14.40	$0.00	$61.06
7	65	$40.29	$9.47	$15.05	$0.00	$64.81
8	70	$43.39	$9.47	$15.70	$0.00	$68.56
9	75	$46.49	$9.47	$16.35	$0.00	$72.31
10	80	$49.58	$9.47	$17.00	$0.00	$76.05

Notes: Apprentice entered prior 9/30/10:
40/45/50/55/60/65/70/75/80/85
Steps are 850 hours

Apprentice to Journeyworker Ratio:1:3

Classification	Effective Date	Base Wage	Health	Pension	Supplemental Unemployment	Total Rate
STEAM BOILER OPERATOR *OPERATING ENGINEERS LOCAL 4*	12/01/2019	$48.23	$12.50	$15.70	$0.00	$76.43
	06/01/2020	$49.31	$12.50	$15.70	$0.00	$77.51
	12/01/2020	$50.45	$12.50	$15.70	$0.00	$78.65
	06/01/2021	$51.54	$12.50	$15.70	$0.00	$79.74
	12/01/2021	$52.68	$12.50	$15.70	$0.00	$80.88
For apprentice rates see "Apprentice- OPERATING ENGINEERS"						
TAMPERS, SELF-PROPELLED OR TRACTOR DRAWN *OPERATING ENGINEERS LOCAL 4*	12/01/2019	$48.23	$12.50	$15.70	$0.00	$76.43
	06/01/2020	$49.31	$12.50	$15.70	$0.00	$77.51
	12/01/2020	$50.45	$12.50	$15.70	$0.00	$78.65
	06/01/2021	$51.54	$12.50	$15.70	$0.00	$79.74
	12/01/2021	$52.68	$12.50	$15.70	$0.00	$80.88
For apprentice rates see "Apprentice- OPERATING ENGINEERS"						
TELECOMMUNICATION TECHNICIAN *ELECTRICIANS LOCAL 103*	09/01/2019	$39.76	$13.00	$16.86	$0.00	$69.62
	03/01/2020	$40.13	$13.00	$17.12	$0.00	$70.25
	09/01/2020	$41.20	$13.00	$17.16	$0.00	$71.36
	03/01/2021	$42.66	$13.00	$17.27	$0.00	$72.93
	09/01/2021	$44.32	$13.00	$17.38	$0.00	$74.70
	03/01/2022	$45.83	$13.00	$17.49	$0.00	$76.32
	09/01/2022	$47.55	$13.00	$17.62	$0.00	$78.17
	03/01/2023	$49.11	$13.00	$17.73	$0.00	$79.84

Classification	Effective Date	Base Wage	Health	Pension	Supplemental Unemployment	Total Rate

Apprentice - *TELECOMMUNICATION TECHNICIAN - Local 103*

Effective Date - 09/01/2019

Step	percent	Apprentice Base Wage	Health	Pension	Supplemental Unemployment	Total Rate
1	45	$17.89	$13.00	$0.54	$0.00	$31.43
2	45	$17.89	$13.00	$0.54	$0.00	$31.43
3	50	$19.88	$13.00	$13.75	$0.00	$46.63
4	50	$19.88	$13.00	$13.75	$0.00	$46.63
5	55	$21.87	$13.00	$14.06	$0.00	$48.93
6	60	$23.86	$13.00	$14.37	$0.00	$51.23
7	65	$25.84	$13.00	$14.69	$0.00	$53.53
8	70	$27.83	$13.00	$14.99	$0.00	$55.82
9	75	$29.82	$13.00	$15.30	$0.00	$58.12
10	80	$31.81	$13.00	$15.61	$0.00	$60.42

Effective Date - 03/01/2020

Step	percent	Apprentice Base Wage	Health	Pension	Supplemental Unemployment	Total Rate
1	45	$18.06	$13.00	$0.54	$0.00	$31.60
2	45	$18.06	$13.00	$0.54	$0.00	$31.60
3	50	$20.07	$13.00	$14.00	$0.00	$47.07
4	50	$20.07	$13.00	$14.00	$0.00	$47.07
5	55	$22.07	$13.00	$14.31	$0.00	$49.38
6	60	$24.08	$13.00	$14.62	$0.00	$51.70
7	65	$26.08	$13.00	$14.94	$0.00	$54.02
8	70	$28.09	$13.00	$15.26	$0.00	$56.35
9	75	$30.10	$13.00	$15.56	$0.00	$58.66
10	80	$32.10	$13.00	$15.87	$0.00	$60.97

Notes:

Apprentice to Journeyworker Ratio:1:1

TERRAZZO FINISHERS *BRICKLAYERS LOCAL 3 - MARBLE & TILE*	02/01/2020	$53.34	$10.75	$21.94	$0.00	$86.03
	08/01/2020	$54.69	$10.75	$22.09	$0.00	$87.53
	02/01/2021	$55.33	$10.75	$22.09	$0.00	$88.17
	08/01/2021	$56.73	$10.75	$22.25	$0.00	$89.73
	02/01/2022	$57.32	$10.75	$22.25	$0.00	$90.32

Classification	Effective Date	Base Wage	Health	Pension	Supplemental Unemployment	Total Rate

Apprentice - *TERRAZZO FINISHER - Local 3 Marble & Tile*

Effective Date - 02/01/2020

Step	percent	Apprentice Base Wage	Health	Pension	Supplemental Unemployment	Total Rate
1	50	$26.67	$10.75	$21.94	$0.00	$59.36
2	60	$32.00	$10.75	$21.94	$0.00	$64.69
3	70	$37.34	$10.75	$21.94	$0.00	$70.03
4	80	$42.67	$10.75	$21.94	$0.00	$75.36
5	90	$48.01	$10.75	$21.94	$0.00	$80.70

Effective Date - 08/01/2020

Step	percent	Apprentice Base Wage	Health	Pension	Supplemental Unemployment	Total Rate
1	50	$27.35	$10.75	$22.09	$0.00	$60.19
2	60	$32.81	$10.75	$22.09	$0.00	$65.65
3	70	$38.28	$10.75	$22.09	$0.00	$71.12
4	80	$43.75	$10.75	$22.09	$0.00	$76.59
5	90	$49.22	$10.75	$22.09	$0.00	$82.06

Notes:

Apprentice to Journeyworker Ratio:1:3

TEST BORING DRILLER *LABORERS - FOUNDATION AND MARINE*	12/01/2019	$40.50	$8.10	$16.80	$0.00	$65.40
	06/01/2020	$41.49	$8.10	$16.80	$0.00	$66.39
	12/01/2020	$42.47	$8.10	$16.80	$0.00	$67.37
	06/01/2021	$43.49	$8.10	$16.80	$0.00	$68.39
	12/01/2021	$44.50	$8.10	$16.80	$0.00	$69.40
For apprentice rates see "Apprentice- LABORER"						
TEST BORING DRILLER HELPER *LABORERS - FOUNDATION AND MARINE*	12/01/2019	$39.22	$8.10	$16.80	$0.00	$64.12
	06/01/2020	$40.21	$8.10	$16.80	$0.00	$65.11
	12/01/2020	$41.19	$8.10	$16.80	$0.00	$66.09
	06/01/2021	$42.21	$8.10	$16.80	$0.00	$67.11
	12/01/2021	$43.22	$8.10	$16.80	$0.00	$68.12
For apprentice rates see "Apprentice- LABORER"						
TEST BORING LABORER *LABORERS - FOUNDATION AND MARINE*	12/01/2019	$39.10	$8.10	$16.80	$0.00	$64.00
	06/01/2020	$40.09	$8.10	$16.80	$0.00	$64.99
	12/01/2020	$41.07	$8.10	$16.80	$0.00	$65.97
	06/01/2021	$42.09	$8.10	$16.80	$0.00	$66.99
	12/01/2021	$43.10	$8.10	$16.80	$0.00	$68.00
For apprentice rates see "Apprentice- LABORER"						
TRACTORS/PORTABLE STEAM GENERATORS *OPERATING ENGINEERS LOCAL 4*	12/01/2019	$48.23	$12.50	$15.70	$0.00	$76.43
	06/01/2020	$49.31	$12.50	$15.70	$0.00	$77.51
	12/01/2020	$50.45	$12.50	$15.70	$0.00	$78.65
	06/01/2021	$51.54	$12.50	$15.70	$0.00	$79.74
	12/01/2021	$52.68	$12.50	$15.70	$0.00	$80.88
For apprentice rates see "Apprentice- OPERATING ENGINEERS"						

Classification	Effective Date	Base Wage	Health	Pension	Supplemental Unemployment	Total Rate
TRAILERS FOR EARTH MOVING EQUIPMENT *TEAMSTERS JOINT COUNCIL NO. 10 ZONE A*	12/01/2019	$36.22	$12.41	$13.72	$0.00	$62.35
	06/01/2020	$37.12	$12.41	$13.72	$0.00	$63.25
	08/01/2020	$37.12	$12.91	$13.72	$0.00	$63.75
	12/01/2020	$37.12	$12.91	$14.82	$0.00	$64.85
	06/01/2021	$37.92	$12.91	$14.82	$0.00	$65.65
	08/01/2021	$37.92	$13.41	$14.82	$0.00	$66.15
	12/01/2021	$37.92	$13.41	$16.01	$0.00	$67.34
TUNNEL WORK - COMPRESSED AIR *LABORERS (COMPRESSED AIR)*	12/01/2019	$51.38	$8.10	$17.20	$0.00	$76.68
	06/01/2020	$52.37	$8.10	$17.20	$0.00	$77.67
	12/01/2020	$53.35	$8.10	$17.20	$0.00	$78.65
	06/01/2021	$54.37	$8.10	$17.20	$0.00	$79.67
	12/01/2021	$55.38	$8.10	$17.20	$0.00	$80.68
For apprentice rates see "Apprentice- LABORER"						
TUNNEL WORK - COMPRESSED AIR (HAZ. WASTE) *LABORERS (COMPRESSED AIR)*	12/01/2019	$53.38	$8.10	$17.20	$0.00	$78.68
	06/01/2020	$54.37	$8.10	$17.20	$0.00	$79.67
	12/01/2020	$55.35	$8.10	$17.20	$0.00	$80.65
	06/01/2021	$56.37	$8.10	$17.20	$0.00	$81.67
	12/01/2021	$57.38	$8.10	$17.20	$0.00	$82.68
For apprentice rates see "Apprentice- LABORER"						
TUNNEL WORK - FREE AIR *LABORERS (FREE AIR TUNNEL)*	12/01/2019	$43.45	$8.10	$17.20	$0.00	$68.75
	06/01/2020	$44.44	$8.10	$17.20	$0.00	$69.74
	12/01/2020	$45.42	$8.10	$17.20	$0.00	$70.72
	06/01/2021	$46.44	$8.10	$17.20	$0.00	$71.74
	12/01/2021	$47.45	$8.10	$17.20	$0.00	$72.75
For apprentice rates see "Apprentice- LABORER"						
TUNNEL WORK - FREE AIR (HAZ. WASTE) *LABORERS (FREE AIR TUNNEL)*	12/01/2019	$45.45	$8.10	$17.20	$0.00	$70.75
	06/01/2020	$46.44	$8.10	$17.20	$0.00	$71.74
	12/01/2020	$47.42	$8.10	$17.20	$0.00	$72.72
	06/01/2021	$48.44	$8.10	$17.20	$0.00	$73.74
	12/01/2021	$49.45	$8.10	$17.20	$0.00	$74.75
For apprentice rates see "Apprentice- LABORER"						
VAC-HAUL *TEAMSTERS JOINT COUNCIL NO. 10 ZONE A*	12/01/2019	$35.64	$12.41	$13.72	$0.00	$61.77
	06/01/2020	$36.54	$12.41	$13.72	$0.00	$62.67
	08/01/2020	$36.54	$12.91	$13.72	$0.00	$63.17
	12/01/2020	$36.54	$12.91	$14.82	$0.00	$64.27
	06/01/2021	$37.34	$12.91	$14.82	$0.00	$65.07
	08/01/2021	$37.34	$13.41	$14.82	$0.00	$65.57
	12/01/2021	$37.34	$13.41	$16.01	$0.00	$66.76
WAGON DRILL OPERATOR *LABORERS - ZONE 1*	12/01/2019	$39.40	$8.10	$16.60	$0.00	$64.10
	06/01/2020	$40.39	$8.10	$16.60	$0.00	$65.09
	12/01/2020	$41.37	$8.10	$16.60	$0.00	$66.07
	06/01/2021	$42.39	$8.10	$16.60	$0.00	$67.09
	12/01/2021	$43.40	$8.10	$16.60	$0.00	$68.10
For apprentice rates see "Apprentice- LABORER"						

Classification	Effective Date	Base Wage	Health	Pension	Supplemental Unemployment	Total Rate
WASTE WATER PUMP OPERATOR *OPERATING ENGINEERS LOCAL 4*	12/01/2019	$48.73	$12.50	$15.70	$0.00	$76.93
	06/01/2020	$49.83	$12.50	$15.70	$0.00	$78.03
	12/01/2020	$50.98	$12.50	$15.70	$0.00	$79.18
	06/01/2021	$52.08	$12.50	$15.70	$0.00	$80.28
	12/01/2021	$53.23	$12.50	$15.70	$0.00	$81.43
For apprentice rates see "Apprentice- OPERATING ENGINEERS"						
WATER METER INSTALLER *PLUMBERS & GASFITTERS LOCAL 12*	09/01/2019	$57.69	$11.82	$17.01	$0.00	$86.52
	03/01/2020	$59.19	$11.82	$17.01	$0.00	$88.02
	09/01/2020	$60.69	$11.82	$17.01	$0.00	$89.52
	03/01/2021	$62.19	$11.82	$17.01	$0.00	$91.02
For apprentice rates see "Apprentice- PLUMBER/PIPEFITTER" or "PLUMBER/GASFITTER"						
Outside Electrical - East						
CABLE TECHNICIAN (Power Zone) *OUTSIDE ELECTRICAL WORKERS - EAST LOCAL 104*	09/01/2019	$28.83	$8.75	$1.86	$0.00	$39.44
	08/30/2020	$29.67	$9.25	$1.89	$0.00	$40.81
For apprentice rates see "Apprentice- LINEMAN"						
CABLEMAN (Underground Ducts & Cables) *OUTSIDE ELECTRICAL WORKERS - EAST LOCAL 104*	09/01/2019	$40.84	$8.75	$10.02	$0.00	$59.61
	08/30/2020	$42.03	$9.25	$10.27	$0.00	$61.55
For apprentice rates see "Apprentice- LINEMAN"						
DRIVER / GROUNDMAN CDL *OUTSIDE ELECTRICAL WORKERS - EAST LOCAL 104*	09/01/2019	$33.64	$8.75	$9.86	$0.00	$52.25
	08/30/2020	$34.62	$9.25	$10.07	$0.00	$53.94
For apprentice rates see "Apprentice- LINEMAN"						
DRIVER / GROUNDMAN -Inexperienced (<2000 Hrs) *OUTSIDE ELECTRICAL WORKERS - EAST LOCAL 104*	09/01/2019	$26.43	$8.75	$1.79	$0.00	$36.97
	08/30/2020	$27.20	$9.25	$1.82	$0.00	$38.27
For apprentice rates see "Apprentice- LINEMAN"						
EQUIPMENT OPERATOR (Class A CDL) *OUTSIDE ELECTRICAL WORKERS - EAST LOCAL 104*	09/01/2019	$40.84	$8.75	$14.10	$0.00	$63.69
	08/30/2020	$42.03	$9.25	$14.35	$0.00	$65.63
For apprentice rates see "Apprentice- LINEMAN"						
EQUIPMENT OPERATOR (Class B CDL) *OUTSIDE ELECTRICAL WORKERS - EAST LOCAL 104*	09/01/2019	$36.04	$8.75	$10.65	$0.00	$55.44
	08/30/2020	$37.09	$9.25	$10.87	$0.00	$57.21
For apprentice rates see "Apprentice- LINEMAN"						
GROUNDMAN *OUTSIDE ELECTRICAL WORKERS - EAST LOCAL 104*	09/01/2019	$21.62	$8.75	$1.65	$0.00	$32.02
	08/30/2020	$22.25	$9.25	$1.67	$0.00	$33.17
For apprentice rates see "Apprentice- LINEMAN"						
GROUNDMAN -Inexperienced (<2000 Hrs.) *OUTSIDE ELECTRICAL WORKERS - EAST LOCAL 104*	09/01/2019	$26.43	$8.75	$1.79	$0.00	$36.97
	08/30/2020	$27.20	$9.25	$1.82	$0.00	$38.27
For apprentice rates see "Apprentice- LINEMAN"						
JOURNEYMAN LINEMAN *OUTSIDE ELECTRICAL WORKERS - EAST LOCAL 104*	09/01/2019	$48.05	$8.75	$17.19	$0.00	$73.99
	08/30/2020	$49.45	$9.25	$17.48	$0.00	$76.18

Classification	Effective Date	Base Wage	Health	Pension	Supplemental Unemployment	Total Rate

Apprentice - *LINEMAN (Outside Electrical) - East Local 104*

Effective Date - 09/01/2019

Step	percent	Apprentice Base Wage	Health	Pension	Supplemental Unemployment	Total Rate
1	60	$28.83	$8.75	$3.36	$0.00	$40.94
2	65	$31.23	$8.75	$3.44	$0.00	$43.42
3	70	$33.64	$8.75	$3.51	$0.00	$45.90
4	75	$36.04	$8.75	$5.08	$0.00	$49.87
5	80	$38.44	$8.75	$5.15	$0.00	$52.34
6	85	$40.84	$8.75	$5.23	$0.00	$54.82
7	90	$43.25	$8.75	$7.30	$0.00	$59.30

Effective Date - 08/30/2020

Step	percent	Apprentice Base Wage	Health	Pension	Supplemental Unemployment	Total Rate
1	60	$29.67	$9.25	$3.39	$0.00	$42.31
2	65	$32.14	$9.25	$3.46	$0.00	$44.85
3	70	$34.62	$9.25	$3.54	$0.00	$47.41
4	75	$37.09	$9.25	$5.11	$0.00	$51.45
5	80	$39.56	$9.25	$5.19	$0.00	$54.00
6	85	$42.03	$9.25	$5.26	$0.00	$56.54
7	90	$44.51	$9.25	$7.34	$0.00	$61.10

Notes:

Apprentice to Journeyworker Ratio:1:2

TELEDATA CABLE SPLICER *OUTSIDE ELECTRICAL WORKERS - EAST LOCAL 104*	02/04/2019	$30.73	$4.70	$3.17	$0.00	$38.60
TELEDATA LINEMAN/EQUIPMENT OPERATOR *OUTSIDE ELECTRICAL WORKERS - EAST LOCAL 104*	02/04/2019	$28.93	$4.70	$3.14	$0.00	$36.77
TELEDATA WIREMAN/INSTALLER/TECHNICIAN *OUTSIDE ELECTRICAL WORKERS - EAST LOCAL 104*	02/04/2019	$28.93	$4.70	$3.14	$0.00	$36.77
TREE TRIMMER *OUTSIDE ELECTRICAL WORKERS - EAST LOCAL 104*	01/31/2016	$18.51	$3.55	$0.00	$0.00	$22.06

This classification applies only to tree work done: (a) for a utility company, R.E.A. cooperative, or railroad or coal mining company, and (b) for the purpose of operating, maintaining, or repairing the utility company's equipment, and (c) by a person who is using hand or mechanical cutting methods and is not on the ground. This classification does not apply to wholesale tree removal.

TREE TRIMMER GROUNDMAN *OUTSIDE ELECTRICAL WORKERS - EAST LOCAL 104*	01/31/2016	$16.32	$3.55	$0.00	$0.00	$19.87

This classification applies only to tree work done: (a) for a utility company, R.E.A. cooperative, or railroad or coal mining company, and (b) for the purpose of operating, maintaining, or repairing the utility company's equipment, and (c) by a person who is using hand or mechanical cutting methods and is on the ground. This classification does not apply to wholesale tree removal.

Classification	Effective Date	Base Wage	Health	Pension	Supplemental Unemployment	Total Rate

Additional Apprentice Information:

Minimum wage rates for apprentices employed on public works projects are listed above as a percentage of the pre-determined hourly wage rate established by the Commissioner under the provisions of the M.G.L. c. 149, ss. 26-27D. Apprentice ratios are established by the Division of Apprenticeship Training pursuant to M.G.L. c. 23, ss. 11E-11L.

All apprentices must be registered with the Division of Apprenticeship Training in accordance with M.G.L. c. 23, ss. 11E-11L.

All steps are six months (1000 hours.)
Ratios are expressed in allowable number of apprentices to journeymen or fraction thereof, unless otherwise specified.

** Multiple ratios are listed in the comment field.
*** APP to JM; 1:1, 2:2, 2:3, 3:4, 4:4, 4:5, 4:6, 5:7, 6:7, 6:8, 6:9, 7:10, 8:10, 8:11, 8:12, 9:13, 10:13, 10:14, etc.
**** APP to JM; 1:1, 1:2, 2:3, 2:4, 3:5, 4:6, 4:7, 5:8, 6:9, 6:10, 7:11, 8:12, 8:13, 9:14, 10:15, 10:16, etc.

IFB # 20-56

SECTION 4.0
FORM FOR GENERAL BID

The undersigned proposes to furnish all labor and materials required for: **Sidewalk Repairs**

The bidder certifies the following bulleted statements and offers to supply and deliver the materials and services specified below in full accordance with the Contract Documents supplied by the City of Somerville

- The bids will be received at the office of the Purchasing Director, Somerville City Hall, 93 Highland Avenue, Somerville, MA 02143 no later than **03/10/2020 by 2PM EST**
- If the **awarded** vendor is a Corporation a "Certificate of Good Standing" (produced by the Mass. Sec. of State) must be furnished with the resulting contract (see Section 3.0.)
- **Awarded Vendor** must comply with Living Wage requirements (see Section 3.0; only for services)
- **Awarded Vendor** must comply with insurance requirements as stated in Section 3.0.
- The Purchasing Director reserves the right to accept or reject any or all bids and/or to waive any informalities if in her/his sole judgment it is deemed to be in the best interest of the City of Somerville.
- The following prices shall include delivery, the cost of fuel, the cost of labor, and all other charges.
- This form to be enclosed in sealed bid package.

Schedule A: Phase 1 & 2

- The Contractor proposes to furnish Labor, Equipment and Materials required to provide sidewalk and ADA ramp repairs throughout the City of Somerville.
- The work to be performed under this contract shall consist of assisting the City of Somerville with a large backlog of sidewalk repair and ADA ramp work orders throughout the City.
- The quantities are estimates only and are not guaranteed.
- The City may opt to perform additional or fewer quantities than those reflected in this bid package.
- If the City opts to perform more work than the estimated quantities, the Unit Price will govern.

ITEM	DESCRIPTION	ESTIMATED QUANTITY	BID UNIT	PER UNIT PRICE	TOTAL PRICE (Unit Price * Estimated Quantity)
1.	UNCLASSIFIED EXCAVATION	1000	CUBIC YARD		
2.	BITUMINOUS CONCRETE EXCAVATION	1000	SQUARE YARD		
3.	GRAVEL BORROW	100	CUBIC YARD		
4.	FINE GRADING AND COMPACTING – SUBGRADE AREAS	100	SQUARE YARD		
5.	DRAINAGE STRUCTURE ADJUSTED	5	EACH		
6.	DRAIN STRUCTURE REBUILT	5	EACH		
7.	BITUMINOUS CONCRETE FOR MISCELLANEOUS WORK	10	TON		

8.	SAWING ASPHALT PAVEMENT	1500	LINEAR FOOT		
9.	CURB REMOVED AND RESET	100	LINEAR FOOT		
10.	CONCRETE SIDEWALK	100	TON		
11.	CONCRETE SIDEWALK AT DRIVEWAYS	12	TON		
12.	CONCRETE WHEELCHAIR RAMP	15	TON		
13.	REPAIRS TO BACK OF SIDEWALK	10	MAN-HOUR		
14.	SIGN REMOVED AND RESET	10	EACH		
15.	GATE BOX ADJUSTED SIDEWALK	1	EACH		
16.	LOAM BORROW	10	CUBIC YARD		
17.	Tac-Tile (brick red) for ADA Ramps	30	EACH		
18.	Flexipave	5	CUBIC YARD		
Total bid Pricing (Sum of the total price of all the items mentioned above) in figure		**$**			
Total bid Pricing (Sum of the total price of all the items mentioned above) in words		**$**			

(***If applicable***) The contract price does not include the items listed on the attached "Bid Form for Alternates;" the bidder understands that the project construction cost estimate provided by the City is inclusive of all the work described in this form.

The undersigned agrees that, if he is selected as general contractor, he will within five days, Saturdays, Sundays and legal holidays excluded, after presentation thereof by the awarding authority, execute a contract in accordance with the terms of this bid and furnish a performance bond and also a labor and materials or payment bond (as indicated in the "Key Project Information" section on the 2nd page of this bid), each of a surety company qualified to do business under the laws of the commonwealth and satisfactory to the awarding authority and each in the sum of the contract price, the premiums for which are to be paid by the general contractor and are included in the contract price; provided, however, that if there is more than one surety company, the surety companies shall be jointly and severally liable.

The undersigned hereby certifies that he is able to furnish labor that can work in harmony with all other elements of labor employed or to be employed on the work; that all employees to be employed at the worksite will have successfully completed a course in construction safety and health approved by the United States Occupational Safety and Health Administration that is at least 10 hours in duration at the time the employee begins work and who shall furnish documentation of successful completion of said course with the first certified payroll report for each employee; and that he will comply fully with all laws and regulations applicable to awards made subject to section 44A.

The undersigned further certifies under the penalties of perjury that this bid is in all respects bona fide, fair and made without collusion or fraud with any other person. As used in this subsection the word "person" shall mean any natural person, joint venture, partnership, corporation or other business or legal entity. The undersigned further certifies under penalty of perjury that the said undersigned is not presently debarred from doing public construction work in the commonwealth under the provisions of section twenty-nine F of chapter twenty-nine, or any other applicable debarment provisions of any other chapter of the General Laws or any rule or regulation promulgated thereunder.

The Undersigned Bidder certifies under the penalties of perjury that:

(1) Pursuant to M.G.L. c. 62C, §49A, to the best of the signatories knowledge and belief, that the Undersigned Bidder is in compliance with all laws of the Commonwealth relating to taxes, reporting of employees and contractors, and withholding and remitting child support, as well as paid all contributions and payments in lieu of contributions pursuant to MGL 151A, §19A(b); and,

(2) the Federal Employer Identification Number (EIN) of the Bidder is: --

The Undersigned Bidder certifies under penalties of perjury that the Bidder is not presently debarred from doing federal or state public construction work, that the Bidder has not had its low bid rejected by any municipality in the previous two years, except:

in which case the reasons for rejection were as follows:

The Undersigned Bidder has submitted all requested referenced information on the Reference Form.

The Undersigned Bidder understands that the contractor and subcontractors will be required to pay prevailing wages to laborers and mechanics, and that if the Undersigned's bid is significantly below the average bid, the Awarding Authority may require the Bidder to substantiate that the bid is based on payment of wages at prevailing rates.

The Undersigned Bidder certifies that it can achieve substantial and final completion by the dates notes in Section 2.2, herein, unless otherwise noted in the Notice to Proceed as delivered to the awarded vendor.

Should certain additional work be required, or should the quantities of certain classes of work be increased or decreased from those required by the Contract Documents, by authorization of the City, unit prices listed on the attached "Unit Price Form" shall at the option of the City be the basis of payment to the Contractor or credit to the City, for such increase or decrease in the work. The unit prices shall represent the exact net amount per unit to be paid the Contractor (in the case of addition or increase) or to be refunded the City (in the case of decrease). Contractually noted adjustments will be allowed for overhead, profit, insurance or other direct or indirect expenses of the Contractor or Subcontractors.

The unit prices shall include cost of fuel, all labor, materials, equipment, overhead, profit, insurance, etc. to cover the finished work of the several kinds called for. Changes shall be processed in accordance with the provisions of the General Conditions governing changes in the work.

Executed this day of , 20 .

Name of Company/Individual:	
Address, City, State, Zip:	
Tel #	**Email:**
Name and Title of Person Signing	
Signature of Authorized Individual	

Please acknowledge receipt of any and all Addenda (if applicable) by signing below and including this form in your bid package. Failure to do so may subject the proposer to disqualification.

ACKNOWLEDGEMENT OF ADDENDA:

Addendum #1 ____ #2 ____ #3____ #4____ #5____ #6____ #7____ #8____ #9____ #10____

PART 2: SAMPLE CONSTRUCTION CONTRACT / CITY's GENERAL TERMS AND CONDITIONS

APPENDIX D
General Conditions

GENERAL TERMS AND CONDITIONS OF THE CONTRACT FOR CONSTRUCTION, RECONSTRUCTION, ALTERATIONS, REMODELING, OR REPAIR OF ANY PUBLIC BUILDING OR PUBLIC WORKS IN THE CITY OF SOMERVILLE

TABLE OF CONTENTS

Article 1: DEFINITIONS
Article 2: ABOUT THE CONTRACT DOCUMENTS
Article 3: THE CITY
Article 4: THE DESIGN PROFESSIONAL
Article 5: THE CONTRACTOR
Article 6: SUBCONTRACTORS
Article 7: PERFORMANCE AND PAYMENT BONDS
Article 8: INSURANCE REQUIREMENTS
Article 9: TESTS AND INSPECTIONS
Article 10: UNCOVERING AND CORRECTING WORK
Article 11: CHANGES IN THE WORK
Article 12: CHANGE IN THE CONTRACT TIME
Article 13: PAYMENTS
Article 14: SUBSTANTIAL COMPLETION
Article 15: GUARANTEES AND WARRANTIES
Article 16: CLAIMS
Article 17: EMERGENCIES
Article 18: TERMINATION OR SUSPENSION OF THE CONTRACT
Article 19: AMERICANS WITH DISABILITIES ACT
Article 20: WRITTEN NOTICE TO THE PARTIES
Article 21: MISCELLANEOUS PROVISIONS

ARTICLE 1
DEFINITIONS

1.1. In General.

1.1.1. Well-known meanings. When words or phrases that have a well-known technical, or construction industry, or trade meaning are used in the Contract Documents, such words or phrases shall be interpreted in accordance with that meaning, unless otherwise stated.

1.1.2. Capitalization. The words and terms defined in this Article are capitalized in these General Terms and Conditions of the Contract. Other capitalized words may refer to a specific document found in the Contract Documents.

1.1.3. Persons. Whenever the word person or persons is used, it includes, unless otherwise stated, entity or entities, respectively, including, but not limited to, corporations, partnerships, and joint venturers.

1.1.4. Singular and Plural. The following terms have the meanings indicated which are applicable to both the singular and the plural thereof.

1.2. Definitions.

1.2.1. Agreement. The Agreement is the written document between the **City** and the **Contractor** which is titled: Owner-Contractor Public Construction Agreement, which is the executed portion of the Contract, and which forms a part of the Contract. The Agreement also includes all documents required to be attached thereto, including, but not limited to, these general conditions, the performance bond, the labor and materials or payment bonds, certificates of insurance, and all Modifications of the Agreement.

1.2.2. Change Order. A Change Order is a document which is signed by the **Contractor**, the **Design Professional**, and the **City;** which is directed to the **Contractor;** which authorizes the **Contractor** to make an addition to, a deletion from or a revision in the Work, or an adjustment in the Contract Sum or in the Contract Time; and which is issued on or after the date of the Agreement between the **Contractor** and the **City.**

1.2.3. City. The **City** refers to the City of Somerville, which is the owner of the Project and is the public awarding authority with whom the **Contractor** has entered into the Contract and for whom the Work is to be provided.

1.2.4. Claim. A Claim is a dispute, demand, or assertion by one of the parties arising out of or relating to the Contract for which such party is seeking relief.

1.2.5. Contract. The Contract consists of all the Contract Documents. The Contract represents the entire and integrated agreement between the parties hereto and supersedes prior negotiations**,** representations, or agreements, either written or oral. The Contract may be amended or modified only by a Modification to the Contract signed by both parties.

1.2.6. Contract Documents. The Contract Documents consist of the Agreement; the notice of award of the Contract; the Notice to Proceed; the entire Project Manual; Change Orders; Construction Change Directives; the **Contractor's** Bid and all accompanying documents; and the **Design Professional's** written interpretations and clarifications issued on or after the issuance of the Notice to Proceed. Shop Drawing submittals and reports or drawings utilized by the **Design Professional** in preparing the Contract Documents are not Contract Documents.

1.2.7. Contractor. The **Contractor** is the person who is awarded the Contract for the Project herein pursuant to M.G.L. c. 149, §44A or M.G.L. c. 39, §39M; and is identified in the Agreement as such. The term "**Contractor**" is intended to include the **Contractor** as well as its authorized representative(s).

1.2.8. Contract Sum. The Contract Sum is the total amount stated in the Agreement payable by the **City** to the **Contractor** for the completion of the Work in accordance with the Contract Documents.

1.2.9. Contract Time. Unless otherwise provided, the Contract Time is the number of days allotted in the Contract Documents or the dates stated in the Agreement, including authorized adjustments, for Substantial Completion.

1.2.10. Coordination Drawings. Coordination Drawings are those drawings, which are prepared by the **Contractor** or a Subcontractor that show the exact alignment, physical locations, and configuration of the mechanical, electrical, and fire protection installations.

1.2.11. Day. The term "day" shall mean calendar day unless otherwise stated.

1.2.12. Design Professional. The **Design Professional** is the person lawfully licensed to practice architecture, engineering, or landscape architecture and has been selected by the **City** to administer the Contract. The term "**Design Professional**," while referred to in the singular, means the **Design Professional** and/or the **Design Professional's** representative.

1.2.13. Field Order. A Field Order is a written order issued by the **Design Professional** which orders minor changes in the Work, but which does not involve a change in the Contract Sum or the Contract Time.

1.2.14. Final Completion. Final Completion is the point in time when the Design Professional finds that the Work has been fully completed in accordance with the Contract Documents. Final Completion shall be no later than thirty (30) days after Substantial Completion.

1.2.15. General Requirements. General Requirements refer to Sections of Division 1 of the Specifications.

1.2.16. Modification. A Modification is a written instrument that amends the Contract after execution of the Agreement.

1.2.17. Notice to Proceed. A Notice to Proceed is a written notice given by the **City,** or the **Design Professional**, to the **Contractor** fixing the date on which the Contract Time will begin to run and on which the **Contractor** shall start to perform its obligations under the Contract Documents.

1.2.18. Plans. The Plans are the drawings which are the graphic and pictorial portions of the Contract Documents, wherever located and whenever issued, showing the design, location, dimensions, scope, extent, and character of the Work to be furnished and performed by the **Contractor** and which have been prepared or approved by the **Design Professional**.

1.2.19. Product Data. Product Data are illustrations, standard schedules, performance charts, instructions, brochures, diagrams, and other information furnished by the **Contractor** to illustrate materials or equipment for some portion of the Work. Product Data are not considered part of the Contract Documents.

1.2.20. Project. The Project is the total Work to be provided under the Contract Documents and may be the whole or a part as indicated elsewhere in the Contract Documents and may include construction by the **City** or by separate contractors. The Project is the Work described in the invitation to bid (advertisement) and Specifications and illustrated by the Plans, including any Modifications.

1.2.21. Project Manual. The Project Manual is the entire set of bidding documents which includes, but is not limited to, the invitation to bid (advertisement), the instructions to bidders, all of the forms, the wage rates, all City and state requirements, the General Terms and Conditions of the Contract, any supplementary conditions thereto, the Plans, the Specifications, and all addenda.

1.2.22. Proposed Change Order. A Proposed Change Order is a Change Order that has been submitted by the **Contractor** to the **Design Professional,** is under review, and has not been approved by the **City**.

1.2.23. Samples. Samples are physical examples of materials, equipment, or workmanship that are representative of some portion of the Work and which establish the standards by which such portion of the Work will be judged. Samples are not considered part of the Contract Documents.

1.2.24. Shop Drawings. Shop Drawings are all drawings, diagrams, illustrations, schedules, and other information that are specifically prepared or assembled by or for the **Contractor** and submitted by the **Contractor** to illustrate some portion of the Work. Shop Drawings are not considered part of the Contract Documents.

1.2.25. Site. The Site is the location of the Project and of the Work.

1.2.26. Specifications. Specifications are those portions of the Contract Documents consisting of written technical descriptions of materials, equipment, construction systems, standards, and workmanship as applied to the Work and certain administrative details applicable thereto.

1.2.27. Subcontractor. A Subcontractor is a person who contracts directly with the **Contractor**, unless otherwise stated.

1.2.28. Submittals. Submittals are those Shop Drawings, Product Data, Samples, or any other required document that are provided to the Design Professional for review and approval.

1.2.29. Substantial Completion. Substantial Completion means that the Work has been completed and the Site or the facility is opened for full and intended public use, except for minor incomplete or unsatisfactory items that do not materially impair the usefulness of the Work. The **Design Professional** shall decide what constitutes "minor," "incomplete," "unsatisfactory," and "materially" and the **Design Professional's** decision shall be final.

1.2.30. Sub-subcontractor. A Sub-subcontractor is a person who has contracted directly with a Subcontractor.

1.2.31. Supplier. A Supplier is a manufacturer, fabricator, distributor, material person, or vendor having a direct contract with the Contractor or with any Subcontractor to furnish materials or equipment to be incorporated into the Work by the Contractor or any Subcontractor.

1.2.32. Work. Work refers to the services and the entire completed construction or the various separately identifiable parts thereof required by the Contract Documents, including all labor, materials, and equipment furnished, furnished and incorporated into the Project, or to be provided by the **Contractor** to fulfill the **Contractor's** obligations. The Work may constitute the whole or a part of the Project.

1.2.33. Construction Change Directive. A **Construction Change** Directive is a written directive to the **Contractor** ordering an addition to, a deletion from, or a revision to the Work issued on or after the date of the Agreement, signed by the **City**, and recommended by the **Design Professional**.

ARTICLE 2

ABOUT THE CONTRACT DOCUMENTS

2.1. Priority;/Conflict.

2.1.1. Priority Among Contract Documents. In the event of conflict among the Contract Documents, the Contract Documents shall be construed according to the following priorities:

Highest Priority: Modifications
Second Priority: Agreement
Third Priority: Addenda-later date to take precedence
Fourth Priority: Supplementary General Conditions
Fifth Priority: General Conditions
Sixth Priority: Plans and Specifications

2.1.1.1. If there is a conflict between the Plans and Specifications, the figured dimensions shall govern over the scaled dimensions. Detailed Plans shall govern over the general Plans. Larger scale Plans shall take precedence over smaller scale Plans. Plans shall govern over Shop Drawings. Whenever notes, specifications, dimensions, details, or schedules in the Specifications or in the Plans, or between the Specifications and the Plans, or in all other instances not specifically noted above, the **Contractor** shall provide, unless otherwise directed by a Modification of the Contract, the better quality or greater quantity of Work at no increase in the Contract Sum or in the Contract Time.

2.1.1.2. Compliance with these priority conditions shall not justify any changes in the Work or any increase in the Contract Sum or Contract Time, unless any such compliance results in Work that may not be reasonably inferred from the Contract Documents as being required to produce the intended result as determined by the **Design Professional**.

2.1.2. Review of the Contract Documents and Field Conditions and Discovery of Conflict, Error, Ambiguity, or Discrepancy. Before starting the Work, and during the progress thereof, the **Contractor** shall carefully study and compare the Contract Documents with each other and with the information furnished by the **City** pursuant to Article 3 and shall at once report to the **Design Professional** any error, inconsistency, or omission the **Contractor** may discover. Any necessary change shall be ordered as provided in Article 11, subject to the requirements of any other provisions of the Contract Documents. The **Contractor** shall not proceed with the Work affected thereby (except in an emergency) until a Modification has been issued. If the **Contractor** proceeds with the Work having discovered such errors, inconsistencies, or omissions contrary to the provisions contained herein, or if by reasonable study of the Contract Documents the **Contractor** could have discovered such, the **Contractor** shall bear all costs arising therefrom. The **Contractor** shall be liable to the **City** for failure to report any conflict, error, ambiguity, or discrepancy of which it knew or should have known.

2.1.3. Field Measurements. The **Contractor** shall take field measurements and verify field conditions and shall carefully compare such field measurements and conditions and other information known to the **Contractor** with the Contract Documents before commencing activities. Errors, inconsistencies, or omissions discovered shall be reported to the **Design Professional** at once.

2.1.4. Statutory Provisions. The **City** and the **Contractor** recognize that other rights duties and obligations with respect to public construction contracts are provided for by statute, notwithstanding the fact that they may not be provided for in the Contract Documents. In case of conflict between the statutory provisions and other provisions of the Contract Documents and the provisions of any applicable statute, the statutory provisions shall govern.

2.1.5. Voided or Unlawful Provisions. In the event any provision in the Contract is voided or deemed unlawful, such provision shall be deleted without affecting the remainder of the Contract.

2.2. Execution.

2.2.1. Execution of the Agreement by the **Contractor** is a representation that the **Contractor** has visited the Site, become familiar with local conditions under which the Work is to be performed, and correlated personal observations with requirements of the Contract Documents.

2.3. Intent.

2.3.1. Entire Agreement. The Contract Documents comprise the entire agreement between the **City** and the **Contractor** concerning the Work**.** The intent of the Contract Documents is to include all items necessary for the proper execution and completion of the Work by the **Contractor**. The Contract Documents are complementary; what is required by one shall be as binding as if required by all. Performance by the **Contractor** shall be required only to the extent consistent with the Contract Documents and reasonably inferable from them as being necessary to produce the intended results. All Work mentioned or indicated in the Contract Documents shall be performed by the **Contractor** as part of this Contract unless it is specifically indicated in the Contract Documents that such Work is to be done by others.

2.3.2. Statutory Provisions. Each and every provision of law, code, and regulation, required by law to be inserted

in these Contract Documents shall be deemed to be inserted herein, and they shall be read and enforced as though it were included herein, and if through mistake or otherwise, any such provision is not inserted, or if not correctly inserted, then upon the application of either party, the Contract Documents shall forthwith be physically amended to make such insertion.

2.3.3. Functionally Complete Project. It is the intent of the Contract Documents to describe a functionally complete Project. The intent of the Contract Documents is to include all items necessary for the proper execution and completion of the Work by the **Contractor**. Any Work, materials, or equipment that may be reasonably inferred from the Contract Documents or from prevailing custom or trade usage as being required to produce the intended result will be furnished and performed by the **Contractor** whether or not specifically called for in the Contract Documents.

2.3.4. Indications or Notations. All indications or notations which apply to one of a number of similar situations, materials, or processes shall be deemed to apply to all such situations, materials, or processes wherever they appear in the Work, except where a contrary result is clearly indicated by the Contract Documents.

2.3.5. Standards or Quality of Materials or Workmanship. Where no explicit quality or standards for materials or workmanship are established for Work, such Work is to be of good quality for the intended use and consistent with the quality of the surrounding Work and of the construction of the Project generally.

2.3.6. Manufactured Products. All manufactured articles, materials, and equipment shall be applied, installed, connected, erected, used, cleaned, and conditioned in accordance with the manufacturer's written or printed directions and instructions unless otherwise indicated in the Contract Documents.

2.3.7. Mechanical, Electrical, and Fire Protection Plans. The mechanical, electrical, and fire protection Plans are diagrammatic only and are not intended to show the alignment, physical locations, or configurations of such Work. Such Work shall be installed without additional cost to the **City** to clear all obstructions, permit proper clearances for the Work of other trades, and present an orderly appearance where exposed. Prior to beginning such Work, the **Contractor** shall prepare Coordination Drawings and demonstrate to the **Design Professional's** satisfaction that the installations will comply with the preceding sentence. The **Contractor** shall be solely liable and responsible for any costs and/or delays resulting from the **Contractor's** failure to prepare such Coordination Drawings.

2.3.8. Locations of Fixtures and Outlets. Exact locations of fixtures and outlets shall be obtained from the **Design Professional** as provided in Article 5 before the Work is roughed in. Work installed without such information from the **Design Professional** shall be relocated at the **Contractor's** expense.

2.3.9. Tests. When test boring or soil test information are included with the Contract Documents or otherwise made available to the **Contractor** and such test boring or soil test information was obtained by the **City** for use by the **Design Professional** in the design of the Project or Work, the **City** does not hold out such information to the **Contractor** as an accurate or approximate indication of subsurface conditions, and no claim for extra cost of extension of time resulting from a reliance by the **Contractor** on such information shall be allowed except as otherwise provided herein. Any such reports are not part of the Contract Documents.

2.3.10. Joining Work. Where the Work is to fit with existing conditions or work to be performed by others, the **Contractor** shall fully and completely join the Work with such conditions or work, unless otherwise specified.

2.4. Organization.

2.4.1. Except as provided in M.G.L. c. 149, §44F, the organization of the Specifications into divisions, sections, and articles, and the arrangement of Plans shall not control the **Contractor** in dividing the Work among Subcontractors or in establishing the extent of Work to be performed by any trade.

2.5. References.

2.5.1. Where codes, manuals, specifications, standards, requirements and publications of public and private bodies are referred to in the Contract Documents whether specifically or by implication, references shall be understood to be to the latest revision prior to the date of receiving bids, except where otherwise indicated. Where statutes are referred to in the Contract Documents whether specifically or by implication, references shall be understood to be to the latest revision.

2.5.2. References herein to particular paragraphs or Articles are solely to facilitate finding additional information with regard to the specific matters and are not to be construed in any way as limiting the possible paragraphs and Articles in which such matters may be found elsewhere in this document.

2.6. Reuse of Design Professional's Written Instruments.

2.6.1. Neither the **Contractor** nor any Subcontractor or Supplier shall have or acquire any title to or ownership rights in any of the Plans, Specifications, or other documents prepared by the **Design Professional** and shall not reuse any of such Plans, Specifications, or other documents without prior written consent of the **City** and the **Design Professional**.

2.7. Written Material of the Contractor.

2.7.1. All written material prepared or collected by the **Contractor** in the course of completing the Work shall be the exclusive property of the **City** and shall not be used by the **Contractor** for any purpose other than the purpose of this Contract.

2.8. Modifying Words.

2.8.1. In the interest of simplicity, modifying words such as "all" and "any" may be omitted, but the fact that such words may be absent from one sentence and appear in another is not intended to affect the interpretation of either statement.

2.9. Use of Certain Words and Terms.

2.9.1. Whenever in the Contract Documents the terms "as ordered," "as directed," "as required," "as allowed," "as approved," or terms of like effect or import are used, or the adjectives "reasonable," "suitable," "acceptable," "proper," "satisfactory," or adjectives of like effect or import are used to describe a requirement, direction, review, or judgment of the **City** or of the **Design Professional** as to the Work, it is intended that such requirement, direction, review, or judgment will be solely to evaluate, in general, the completed Work for compliance with the requirements of and information in the Contract Documents and conformance with the design concept of the completed Project as a functioning whole as shown or indicated in the Contract Documents (unless there is a specific statement indicating otherwise).

2.9.2. The use of any such term or adjective shall not be effective to change the duties and responsibilities of the **City** or the **Design Professional** from those assigned in the Contract Documents or to assign any duty or authority to supervise or direct the furnishing or performance of the Work or any duty or authority to undertake responsibility contrary to the provisions of the Contract Documents.

2.9.3. When the words "Contractor," "Subcontractor," Sub-subcontractor," and "Supplier" are used, they are intended to include their employees and agents, unless otherwise specified.

2.10. Modification of the Contract Documents.

2.10.1. Major Modifications. Major Modifications may affect the Contract Sum or the Contract Time. The Contract Documents may be amended to provide for additions, deletions, and revisions in the Work or to modify the terms and conditions thereof in one or more of the following ways, all of which must contain a written endorsement by the **City**:

2.10.1.1. a formal written amendment;
2.10.1.2. a Change Order;
2.10.1.3. a **Construction Change** Directive; or
2.10.1.4. the **Design Professional's** written interpretation, clarification, or decision.

2.10.2. Minor Modifications. Minor modifications do not affect the Contract Sum or the Contract Time. The requirements of the Contract Documents may be supplemented and minor variations and deviations of the Work may be authorized in one or more of the following ways:

2.10.2.1. a Field Order; or
2.10.2.2. the **Design Professional's** approval of a Shop Drawing or Sample.

ARTICLE 3
THE CITY

3.1. Signatory.

3.1.1. All documents which require a signature or an endorsement by the **City** must be signed by the Mayor in order to be deemed ratified by the **City**.

3.2. Requirements to Provide Documents.

3.2.1. To the extent they are available, the **City** shall furnish surveys describing physical characteristics, legal limitations, and utility locations for the site of the Project, and a legal description of the Site.

3.2.2. The **City** shall obtain and pay for necessary approvals, easements, assessments, and charges that are customarily secured prior to the execution of the Contract.

3.2.3. The **City** shall furnish information or services required of the **City** hereunder with reasonable promptness after receipt from the **Contractor** of a written request for such information or services.

3.2.4. The **City** shall provide the **Contractor**, at no charge, such copies of the Project Manual as are reasonably necessary for the execution of the Work.

3.3. Clerk of the Works.

3.3.1. The **City** may engage a Clerk of the Works for this Project, in which case the **City** shall, upon request of the **Contractor**, provide the **Contractor** with a written statement of the duties, responsibilities, and limitations of authority of such Clerk of the Works. Except as expressly set forth in such written statement, the Clerk of the Works shall have no authority to approve Work, to approve Change Orders, or to exercise any of the power and authority of the **City** or the **Design Professional**. The Clerk of the Works shall observe the **Contractor's** operations and construction activities for compliance with the Plans and Specifications. The Clerk of the Works shall have access to all areas of the Project at all times. The **Contractor** shall fully cooperate with the Clerk of the Works in the performance of the Clerk's duties.

3.4. City's Right to Perform Construction and to Award Separate Contracts.

3.4.1. The **City** reserves the right to perform construction or operations at the Site with its own forces or others. If the **Contractor** claims that a delay or additional cost is involved because of such action by the **City**, the **Contractor** shall make such Claim as provided elsewhere in the Contract Documents.

3.4.2. When the separate contracts are awarded for different portions of the Project or other construction or operations on the site, the term "**Contractor**" in the Contract Documents in each case shall mean the **Contractor** who executes each separate City-Contractor Agreement.

3.4.3. The **City** shall provide for coordination of the activities of the **City's** own forces and of each separate contractor with the Work of the **Contractor**, who shall cooperate with them. The **Contractor** shall afford each other person access to the Site and shall properly coordinate its Work with that of the persons performing other work. The **Contractor** shall participate with other separate contractors and the **City** in reviewing their construction schedules when directed to do so. The **Contractor** shall make any revisions to the construction schedules deemed necessary after a
joint review and mutual agreement. The construction schedules shall then constitute the schedules to be used by the **Contractor**, separate contractors, and the **City** until subsequently revised.

3.5. Limitations on the City's Responsibilities.

3.5.1. The **City** shall not supervise, direct, or have control or authority over, nor be responsible for the **Contractor's** means, methods, techniques, sequences, or procedures of construction or the safety precautions and programs incident thereto, or for any failure of the **Contractor** to comply with laws, codes and regulations applicable to the furnishing or performance of the Work. The **City** will not be responsible for the **Contractor's** failure to perform or furnish the Work in accordance with the Contract Documents. The **City** is not responsible for the acts or omissions of the **Contractor**, any Subcontractor, Supplier, or anyone for whose acts the **Contractor**, any Subcontractor or Suppliers may be liable.

3.5.2. The **City's** authority to review any of the **Contractor's** progress schedules, or its decision to raise or not to raise any objections about such schedules shall not impose on the **City** any responsibility for the timing, planning, scheduling, or execution of the Work, nor in any way give rise to any duty or responsibility on the part of the **City** to exercise this authority for the benefit of the **Contractor**, any Subcontractor or Supplier or any other party.

3.5.3. The **City's** decision to raise or not to raise objections with regard to any aspects of the **Contractor's** insurance shall in no way give rise to any duty or responsibility on the part of the **City** to or for the benefit of the **Contractor**, any Subcontractor, any Supplier, or any other party.

3.6. Reservation of Rights.

3.6.1. The **City** reserves the right to correct at any time any error in any progress payment that may have been made.

3.6.2. Should defective Work be discovered subsequent to final payment, the **City** reserves the right to make a claim and recover all costs and professional fees associated therewith, including the cost of removing and/or replacing the defective Work.

3.7. Waivers.

3.7.1. All waivers by the **City** are valid only to the extent that they are signed by the **City**. Any such waivers pertain only to the specific matter contained in the waiver and not to any similar, subsequent matters.

ARTICLE 4
THE DESIGN PROFESSIONAL

4.1. City's Representative.

4.1.1. The **Design Professional** is the **City's** representative (1) during construction, (2) until final payment is due, and (3) with the **City's** concurrence, from time to time during the correction period described in Article 10. The **Design Professional** will advise and consult with the **City**. The **Design Professional** will have authority to act on behalf of the **City** only to the extent provided in the Contract Documents, unless otherwise modified by a written instrument in accordance with other provisions of the Contract.

4.1.2. The duties, responsibilities, and the limitations of authority of the **Design Professional** as the **City's** representative during construction are set forth in the Contract Documents and shall not be extended without the written consent of the **City** and the **Design Professional**.

4.2. Administration of the Contract.

4.2.1. The **Design Professional** will provide administration of the Contract as described in the Contract Documents, unless the **City** has engaged a construction manager.

4.3. Visits to the Site.

4.3.1. The **Design Professional** will visit the site at intervals appropriate to the stage of construction to become generally familiar with the progress and quality of the completed Work and to determine in general if the Work is being performed in a manner indicating that the Work, when completed, will be in accordance with the Contract Documents. However, the **Design Professional** will not be required to make exhaustive or continuous on-site inspections to check the quality or quantity of the Work. On the basis of on-site observations as an architect, engineer, or landscape architect, the **Design Professional** will keep the **City** informed of progress of the Work in writing and will endeavor to guard the **City** against defects and deficiencies in the Work.

4.4. Communications Facilitating Contract Administration.

4.4.1. Except as otherwise provided in the Contract Documents or when direct communications have been specially authorized, the **City** and the **Contractor** shall endeavor to communicate through the **Design Professional**. Communications by and with the **Design Professional's** consultants shall be through the **Design Professional**. Communications by and with Subcontractors and Suppliers shall be through the **Contractor**. Communications by and with **City** employees and separate contractors shall be through the **City**.

4.4.2. When it deems it necessary or expedient, the **City** may communicate directly with the **Contractor**, any Subcontractors, Suppliers, or consultants.

4.5. Certification of Applications for Payment.

4.5.1. Based on the **Design Professional's** observations and evaluations of the **Contractor's** applications for payment, the **Design Professional** will review and certify the amounts due the **Contractor** and will issue certificates for payment in such amounts.

4.6. Rejection of Work.

4.6.1. The **Design Professional** will have authority to reject or disapprove Work (1) that does not conform to the Contract Documents; (2) that the **Design Professional** believes to be defective; and (3) that the **Design Professional** believes will not produce a completed Project conforming to the Contract Documents or that will prejudice the integrity of the design concept of the completed Project as a functioning whole as indicated by the Contract Documents. Whenever the **Design Professional** considers it necessary or advisable for implementation of the intent of the Contract Documents, the **Design Professional** will have authority to require additional inspection or testing of the Work in accordance with Article 9, whether or not such Work is fabricated, installed, or completed. However, neither this authority of the **Design Professional** nor a decision made in good faith either to exercise or not to exercise such authority shall give rise to a duty or responsibility of the **Design Professional** to the **Contractor**, Subcontractors, Suppliers, or other persons performing portions of the Work.

4.7. Review of Submittals.

4.7.1. The **Design Professional** will review or take other appropriate action upon the **Contractor's** submittals such as Shop Drawings, Product Data, and Samples, but only for the limited purpose of checking for conformance with information given and the design concept expressed in the Contract Documents and only to the extent that the **Design Professional** believes desirable to protect the **City's** interest. The **Design Professional's** action will be taken with reasonable promptness, while allowing sufficient time in the **Design Professional's** professional judgment to permit adequate review, taking into account the

time periods set forth in the latest schedule prepared by the **Contractor** and approved by the **Design Professional**. Review of such submittals is not conducted for the purpose of determining the accuracy and completeness of other details such as dimensions and quantities, or for substantiating instructions for installation or performance of equipment or systems, all of which remain the responsibility of the **Contractor** as required by the Contract Documents. The **Design Professional's** review of the **Contractor's** submittals shall not relieve the **Contractor** of the obligations under Article 5. The **Design Professional's** review shall not constitute approval of safety precautions or of any construction means, methods, techniques, sequences, or procedures. The **Design Professional's** approval of a specific item shall not indicate approval of an assembly of which the item is a component. After the rejection of the second resubmittal of any one Submittal, the **Contractor** shall bear the cost of the review of each subsequent resubmittal.

4.8. Preparation of Change Orders and Construction Change Directives.

4.8.1. The **Design Professional** will prepare Change Orders and **Construction Change** Directives and may authorize minor Modifications in the Work as provided in Article 11.

4.9. Inspections.

4.9.1. The **Design Professional** will conduct inspections to determine the date or dates of Substantial Completion and the date of final completion; will receive and forward to the **City** for the **City's** review and records written warranties and related documents required by the Contract and assembled by the **Contractor**; and will issue a final certificate for payment upon the **Contractor's** compliance with all of the requirements of the Contract Documents.

4.10. Interpretations, Clarifications, and Decisions.

4.10.1. The **Design Professional** will interpret and decide matters concerning performance under and requirements of the Contract Documents on written request of either the **City** or the **Contractor**. The **Design Professional's** response to such requests will be made with reasonable promptness and within the time set forth in the Agreement between the **City** and the **Design Professional**. Any such written interpretations, clarifications, and decisions shall be binding on the **Contractor**.

4.10.2. Interpretations, clarifications, and decisions of the **Design Professional** will be consistent with the intent of and reasonably inferable from the Contract Documents and will be in writing or in the form of drawings. The **Design Professional** will not be liable to the **Contractor**, any Subcontractor, or Supplier for results of interpretations, clarifications, or decisions so rendered in good faith.

4.10.3. The **Design Professional** may, as the **Design Professional** judges desirable, issue additional drawings or instructions indicating in greater detail the construction or design of the various parts of the Work; such drawings or instructions may be effected by a Field Order or other notice to the **Contractor**, and provided such drawings or instructions are reasonably consistent with the previously existing Contract Documents, the Work shall be executed in accordance with such additional drawings or instructions without any additional cost or an extension of the Contract Time.

4.10.4. The **Design Professional's** decisions on matters relating to aesthetic effect must be consistent with the **City's** and will be final.

4.11. Limitation on the Design Professional's Responsibilities.

4.11.1. Neither the **Design Professional's** authority to act under the provisions of the Contract Documents nor any decision made by the **Design Professional** in good faith to exercise or not to exercise such authority shall give rise to any duty or responsibility of the **Design Professional** to the **Contractor**, any Subcontractor, any Supplier, any surety for any of them or any other person.

4.11.2. The **Design Professional** will not have control over or charge of and will not be responsible for construction means, methods, techniques, sequences, or procedures, or for safety precautions and programs in connection with the Work, since these are solely the **Contractor's** responsibility as provided in Article 5. The **Design Professional** will not be responsible for the **Contractor's** failure to carry out the Work in accordance with the Contract Documents. The **Design Professional** will not have control over or charge of and will not be responsible for acts or omissions of the **Contractor**, Subcontractors, Suppliers, or of any other persons performing portions of the Work.

ARTICLE 5
THE CONTRACTOR

5.1. Relationship with the City.

5.1.1. The **Contractor** is an independent contractor and not an employee of the **City.** The **Contractor** is engaged by virtue of the Contract to perform only those services contained therein. The **Contractor** is not authorized to contract on behalf of the **City** or to incur any liability on the part of the **City**.

5.2. Code of Conduct.

5.2.1. M.G.L. c. 268A establishes standards of conduct for officials and employees of the **City**. The **Contractor** shall familiarize itself with the statute and act accordingly.

5.3. Quality Assurance.

5.3.1. The **Contractor** shall be responsible for ensuring that it, all Subcontractors, Suppliers, and all persons employed to do the Work under the Contract Documents perform in a professional manner, provide a high quality of service and Work, and perform in accordance with the Contract Documents.

5.4. Supervision.

5.4.1. Competence and Efficiency. The **Contractor** shall supervise, inspect, and direct the Work competently and efficiently, devoting such attention thereto and applying such skills, attention and expertise as may be necessary to perform the Work in accordance with the Contract Documents.

5.4.2. Construction Means, Methods, Techniques, Etc. The **Contractor** shall be solely responsible for and have control over construction means, methods, techniques, sequences, and procedures and for coordinating all portions of the Work under the Contract. Where the Contract Documents refer to particular construction means, methods, techniques, sequences, or procedures or indicate or imply that such are to be used in the Work, such mention is intended only to indicate that the operations of the **Contractor** shall be such as to produce at least the quality of Work implied by the operations described. The actual determination of whether or not the described operations may be safely and suitably employed on the Work shall be the responsibility of the **Contractor**, who shall notify the **Design Professional** in writing, prior to implementation, of the actual means, methods, techniques, sequences, or procedures which will be employed on the Work, if these differ from those mentioned in the Contract Documents. All loss, damage, liability or cost of correcting defective work arising from the employment of any construction means, methods, techniques, sequences, or procedures shall be borne by the **Contractor**, notwithstanding that such construction means, methods, techniques, sequences, or procedures are referred to, indicated or implied by the Contract Documents, unless the **Contractor** has given timely notice to the **City** and the **Design Professional** in writing that such means, methods, techniques, sequences, or procedures are not safe or suitable, and the **City** has then instructed the **Contractor** in writing to proceed at the **City's** risk.

5.4.3. Variance between the Contract Documents and Statutes, Ordinances, Codes, Rules, and Regulations. The **Contractor** shall promptly notify the **Design Professional** and the **City** in writing of any variances between the Contract Documents and statutes, ordinances, codes, rules, and regulations. If the **Contractor,** without written notice to the **Design Professional** and the **City,** performs Work knowing that it is contrary to statutes, ordinances, codes, rules, and regulations, the **Contractor** shall assume full responsibility for such Work and shall bear the costs associated therewith, i.e., replacement, repairs, removal, and fines.

5.4.4. Acts and Omissions. The **Contractor** shall be responsible to the **City** for the acts and omissions of all persons performing or supplying the Work.

5.4.5. Inspections. The **Contractor** shall be responsible for inspection of portions of Work already performed under this Contract to determine whether such portions are in proper condition to receive subsequent Work.

5.5. Personnel.

5.5.1. Suitability. The **Contractor** shall provide competent, properly licensed and/or certified, suitably qualified, and reliable personnel to perform the Work required by the Contract Documents. The **Contractor** shall enforce strict discipline and maintain good order at the site at all times. The **Contractor** shall not employ any Subcontractor, Supplier, or other person, whether initially or as a substitute, against whom the **City** may have reasonable objection. Acceptance of any Subcontractor or other person by the **City** shall not constitute a waiver of any right of the **City** to reject defective Work.

5.5.2. Sexual Harassment. Sexual harassment is an unlawful practice under M.G.L. c. 151B. The **Contractor**, Subcontractors, and all other persons responsible for any portion of the Work shall refrain from engaging in sexual harassment. The **Contractor** shall be responsible for any acts of sexual harassment committed by any persons responsible for any portion of the Work. The **Contractor** shall take appropriate action against any such individuals.

5.5.3. Weapons and Illegal Drugs. No weapons or illegal drugs are permitted on the Site. It is the responsibility of the **Contractor** to ensure that no weapons or illegal drugs are brought to the Site.

5.5.4. Maximum Work Day and Work Week. (*Reference:* M.G.L. c. 149, §§30 and 34;). No laborer, worker, mechanic, foreperson or inspector working within this Commonwealth in the employ of the **Contractor**, Subcontractor or other person doing or contracting to do the whole or part of the work contemplated by the Contract, shall be required or permitted to work more than eight (8) hours in any one day or more than forty-eight (48) hours in any one week, or more than six (6) days in any one week, except in cases of emergency.

5.5.5. Lodging. (*Reference:* M.G.L. c. 149, §25;). Every employee under this Contract shall lodge, board and trade where and with whom he or she elects, and neither the **Contractor** nor its agents or employees shall, either directly or indirectly, require as a condition of the employment of any person that the employee shall lodge, board or trade at a particular place or with a particular person.

5.5.6. Wage Rates. (*Reference:* M.G.L. c. 149, §27). Mechanics and apprentices, teamsters, chauffeurs and laborers performing Work shall be paid no less than the minimum rate of wages included in the bid documents and the Project Manual and which are made part of the Contract. They shall continue to be the minimum rate of wages for said employees during the life of the Contract. The **Contractor** shall keep a legible copy of the wage rates posted in a conspicuous place at the site during the life of the Contract. These rates of wages shall include payments by employers to health and welfare plans, pension plans and supplementary unemployment benefit plans as provided in M.G.L. c. 149, §26;, and such payments shall be considered as payments to persons under M.G.L. c. 149, §27 performing work as therein provided. If the **Contractor** does not make payments to a health and welfare plan, a pension plan and a supplementary unemployment benefit plan, where such payments are included in the rates of wages, the **Contractor** shall pay the amount of said payments directly to each employee engaged in the Work. If the **Contractor** pays less than the rate of wages, including payments to health and welfare funds and pension funds, or the equivalent payments in wages to any person performing Work within the classifications as determined by the Commissioner of Labor and Industries, and if the **Contractor** takes or receives for its own use or the use of any other person, as a rebate, refund or gratuity, or in any other guise, any part or portion of the wages, including payments to health and welfare funds and pension funds, or the equivalent payment in wages, paid to such person for Work done or service rendered on the Project, the **Contractor** will be subject to the penalties set forth in M.G.L. c. 149, §27. Notwithstanding the foregoing and the requirements of 5.5.7.1 and 5.5.7.2 below, if the Contract is federally funded, federal labor standards apply, including Davis Bacon minimum wage rates and payroll reporting requirements. See the "Federal Requirements" section at the end of these contract documents.

5.5.7. Payroll Records of Employees. (*Reference:* M.G.L. c. 149, §27B;). The **Contractor** and all Subcontractors who are subject to M.G.L. c. 149, §§27 and 27A shall keep a true and accurate record of all mechanics and apprentices, teamsters, chauffeurs, and laborers performing Work showing the name, address and occupational classification of each such employee, the hours worked by and the wages paid to all such employees. The **Contractor** and the Subcontractors shall submit a copy of said record to the **City** on a weekly basis.

5.5.7.1. (*Reference:* M.G.L. c. 149, §27B;). The **Contractor** and all Subcontractors who are subject to M.G.L. c. 149, §§27 and 27A shall preserve their payroll records for a period of three (3) years from the date of completion of the Contract.

5.5.7.2. (*Reference:* M.G.L. c. 149, §27B). The **Contractor** and all Subcontractors who are subject to M.G.L. c. 149, §§27 and 27A shall furnish to the Commissioner of Labor and Industries and the **City** within fifteen (15) days after completion of their portion of the Work a statement executed by the **Contractor** or Subcontractor or by any authorized officer or employee of the **Contractor** or Subcontractor who supervises the payment of wages in the form found in M.G.L. c.149, §27B.

5.6. Superintendence.

5.6.1. Employment of a Superintendent. The **Contractor** shall employ a competent, properly licensed superintendent, reasonably acceptable to the **City**, and necessary assistants who shall be in attendance at the Site full time during the progress of the Work until the date of Substantial Completion and for such additional time thereafter as the **Design Professional** or the **City** may determine to be necessary for the expeditious completion of the Work, including final completion. If continually in the employ of the Contractor, the same Superintendent shall be assigned to this project.

5.6.2. Removal/Replacement of a Superintendent. The **Contractor** shall remove the superintendent if requested to do so in writing by the **City** and shall promptly replace such superintendent with a competent person reasonably acceptable to the **City**. The superintendent shall represent the **Contractor**, and communications given to the superintendent shall be as binding as if given to the **Contractor**. The **Contractor** shall not replace the superintendent without written notice to the **City** and the **Design Professional**.

5.6.3. Registered Professional Engineer or Registered Land Surveyor. The **Contractor** shall retain a competent Registered Professional Engineer or Registered Land Surveyor, acceptable to the **Engineer**, who shall establish the exterior lines and required elevations of all buildings and structures to be erected on the site and shall establish sufficient lines and grades for the construction of associated Work such as, but not limited to, roads, utilities, and site grading. The Engineer or Land Surveyor shall certify as to the actual location of the constructed facilities in relation to property lines, building lines, easements, and other restrictive boundaries.

5.6.4. Building Grades, Lines, Etc.; The **Contractor** shall establish the building grades; lines; levels; and column, wall and partition lines required by the various Subcontractors in laying out their Work.

5.6.5. Coordination and Supervision. The **Contractor** shall coordinate and supervise the Work performed by Subcontractors to the end that the Work is carried out without conflict between trades and so that no trade, at any time, causes delay to the general progress of the Work. The **Contractor** and all Subcontractors shall at all times afford each trade, any separate contractor, or the **City**, every reasonable opportunity for the installation of Work and the storage of materials.

5.6.6. Job Meetings. There shall be job meetings held on a weekly basis, or more often if required by the **City**. The **Contractor** shall arrange for and attend weekly job meetings with the **Design Professional** and such other persons as the **Design Professional** may from time to time wish to have present. The **Contractor** shall be represented by a principal, project manager, general superintendent or other authorized main office representative, as well as by the **Contractor's** own superintendent. An authorized representative of any Subcontractor or Sub-subcontractor shall attend such meetings if the representative's presence is requested by the **Design Professional**. Such representatives shall be empowered to make binding commitments on all matters to be discussed at such meetings, including costs, payments, Change Orders, time schedules and workforce power. Any notices required under the Contract may be served on such representatives.

5.7. Materials, Labor, Equipment, Etc.

5.7.1. Provision of. Unless otherwise provided in the Contract Documents, the **Contractor** shall furnish and assume full responsibility for all materials, equipment, labor, transportation, construction equipment and machinery, tools, appliances, fuel, power, light, heat, telephone, water, sanitary facilities, temporary facilities, and all other facilities and incidentals necessary for the furnishing, performance, testing, start-up, and completion of the Work. The Contractor shall and will, in good workmanlike manner, do and perform all work and furnish all supplies and materials, machinery, equipment, facilities and means, except as herein otherwise expressly specified, necessary or proper to perform and complete all the work required by this contract, within the time herein specified, in accordance with the provisions of this contract and said specifications and in accordance with the plans and drawings, and in accordance with the directions of the Design Professional or CONTRACTING DEPARTMENT (AS STATED ON THE FIRST PAGE OF THE AGREEMENT) as given from time to time during the progress of the work. He shall furnish, erect, maintain and remove such construction plant and such temporary works as may be required. The Contractor shall observe, comply with and be subject to all terms, conditions, requirements and limitations of the contract and specifications, and shall do, carry on and complete the entire work to the satisfaction of the Design Professional and CONTRACTING DEPARTMENT (AS STATED ON THE FIRST PAGE OF THE AGREEMENT).

5.7.1.1. The Contractor shall furnish, install and/or maintain ample sanitary facilities for the workmen. As the needs arise, a sufficient number of enclosed temporary toilets shall be conveniently placed as required by the sanitary codes of the State and Local Government. Drinking water shall be provided from an approved source, so piped or transported as to keep it safe and fresh and served from single service containers or satisfactory types of sanitary drinking stands or fountains. All such facilities and services shall be furnished in strict accordance with existing and governing health regulations. Nothing in this Section shall be construed as forbidding the use of facilities available in existing buildings on the job site if they meet the above requirements and the use of them will not interfere with the progress of the work.

5.7.2. Quality and Use of. All materials and equipment shall be of good quality and new, except as otherwise provided in the Contract Documents. If required by the **Design Professional**, the **Contractor** shall furnish satisfactory evidence (including reports of required tests) as to the kind and quality of materials and equipment. All materials and equipment shall be applied, installed, connected, erected, used, cleaned, and conditioned in accordance with instructions of the applicable Supplier, except as otherwise provided in the Contract Documents.

5.7.3. Discrepancies or Defects. If the **Contractor** is unable to perform its Work because of discrepancies or defects in the work of the **City's** own forces or of a separate contractor, the **Contractor** shall immediately notify the **Design Professional** and the **City** in writing of the conditions that render unable to so perform. Failure to notify the **Design Professional** constitutes an acknowledgment and acceptance of the other work as being fit and proper for integration with the **Contractor's** Work except for latent or non-apparent defects and deficiencies in the other work.

5.8. Contractor's Management and Financial Statement Requirements. (*Reference:* M.G.L. c. 30, §39R)

5.8.1. The words defined herein shall have the meaning stated below whenever they appear in this Paragraph:

5.8.1.1. "Contractor" means any person, corporation, partnership, joint venture, sole proprietorship, or other entity awarded a contract pursuant to M.G.L. c.149, §44A-H or M.G.L. c. 30, §39M, inclusive.

5.8.1.2. "Contract" means any contract awarded or executed pursuant to M.G.L. c. 149, §44A-H or M.G.L. c. 30, §39M, which is for an amount or estimate amount that exceed the dollar amount set forth in M.G.L. c. 30, §39R.

5.8.1.3. "Records" means books of original entry, accounts, checks, bank statements and all other banking documents, correspondence, memoranda, invoices, computer printouts, tapes, discs, papers and other documents or transcribed information of any type, whether expressed in ordinary or machine language.

5.8.1.4. "Independent Certified Public Accountant" means a person duly registered in good standing and entitled to practice as a certified public accountant under the laws of the place of his/her residence or principal office and who is

in fact independent. In determining whether an accountant is independent with respect to a particular person, appropriate consideration should be given to all relationships between the accountant and that person or any affiliate thereof. Determination of an accountant's independence shall not be confined to the relationships existing in connection with the filing of reports with the **City**.

5.8.1.5. "Audit," when used in regard to financial statement, means an examination of records by an independent certified public accountant in accordance with generally accepted accounting principles and auditing standards for the purpose of expressing a certified opinion thereon, or, in the alternative, a qualified opinion or a declination to express an opinion for stated reasons.

5.8.1.6. "Accountant's Report," when used in regard to financial statements, means a document in which an independent certified accountant indicates the scope of the audit which s/he has made and sets forth his/her opinion regarding the financial statements taken as a whole with listing of noted exceptions and qualifications, or an assertion to the effect that an overall opinion cannot be expressed. When an overall opinion cannot be expressed the reason therefor shall be stated. An accountant's report shall include as part thereof a signed statement by the responsible corporate officer attesting that management has fully disclosed all material facts to the independent certified public accountant, and that the audited financial statement is a true and complete statement of the financial condition of the contractor.

5.8.1.7. "Management," when used herein, means the chief executive officers, partners, principals or other person or persons primarily responsible for the financial and operational policies and practices of the Contractor.

5.8.1.8. Accounting terms, unless otherwise defined herein shall have a meaning in accordance with generally accepted accounting principles and auditing standards.

5.8.2. The Contractor shall make, and keep for at least six (6) years after final payment, books, Records, and accounts that in reasonable detail accurately and fairly reflect the transactions and dispositions of the Contractor.

5.8.2.1 Federal Requirements: The Contractor shall permit the City, HUD and/or any other administering agency named herein, the Comptroller General of the United States, or any of their duly authorized representatives, to have access to any books, documents, papers, and records of the Contractor which are directly pertinent to a specific HUD program for the purpose of making audits, examinations, excerpts, and transcriptions.

5.8.3. Until the expiration of six (6) years after final payment, the Office of the Inspector General, and the Deputy Commissioner of the Division of Capital Asset Management shall have the right to examine any books, documents, papers or Records of the Contractor or of its Subcontractors that directly pertain to, and involve transactions relating to, the Contractor or its Subcontractors.

5.8.4. The Contractor shall describe any change in the method of maintaining Records or recording transactions which materially affect any statements filed with the **City**, including in its description the date of the change and reasons therefor, and shall accompany said description with a letter from the Contractor's Independent Certified Public Accountant approving or otherwise commenting on the changes.

5.8.5. The Contractor shall file a Statement of Management on internal accounting controls as set forth below prior to the execution of the Contract.

5.8.6. The Contractor shall file prior to the execution of the contract and shall continue to file annually, an Audited Financial Statement for the most recent completed fiscal year as set forth below.

5.8.7. The Contractor shall file with the **City** a Statement of Management as to whether the system of internal accounting controls of the Contractor and its subsidiaries reasonably assures that:

5.8.7.1. transactions are executed in accordance with Management's general and specific authorization;

5.8.7.2. transactions are recorded as necessary to permit preparation of financial statements in conformity with generally accepted accounting principles, and to maintain accountability for assets;

5.8.7.3. access to assets is permitted only in accordance with Management's general or specific authorization; and

5.8.7.4. the recorded accountability for assets is compared with the existing assets at reasonable intervals and appropriate action is taken with respect to any difference.

5.8.7.5. The Contractor shall also file with the **City** a statement prepared and signed by an Independent Certified Public Accountant stating that s/he has examined the Statement of Management on internal accounting controls, and expressing an opinion as to:

5.8.7.5.1. whether the representation of Management in response to this paragraph and paragraphs 5.8.2. through 5.8.6 above are consistent with the result of Management's evaluation of the system of internal accounting controls; and

5.8.7.5.2. whether such representations of Management are, in addition, reasonable with respect to transactions and assets in amounts which would be material when measured in relation to the applicant's financial statements.

5.8.8. The Contractor shall annually file with the Commissioner of the Division of Capital Asset Management during the term of the contract a financial statement prepared by an Independent Certified Public Accountant on the basis of an Audit by such accountant. The final statement filed shall include the date of final payment. All statements shall be accompanied by an accountant's report. Such statements shall be made available to the **City** upon request.

5.8.9. The City's Contracting Department, its authorized representative and agents and the HUD Representative for the Secretary shall, at all times have access to and be permitted to observe and review all work materials, equipment, payrolls, personnel records, employment conditions, material invoices, and other relevant data and records pertaining to this Contract, provided, however, that all instructions and approval with respect to the work will be given to the Contractor only by CONTRACTING DEPARTMENT (AS STATED ON THE FIRST PAGE OF THE AGREEMENT) through its authorized representatives or agents. Records and statements required to be made, kept or filed under the provisions of this section shall not be public records as defined in G.L. 4, §7 or equivalent federal legislation. They shall not be made available to the public, but shall be available only to the governmental authorities named herein.

5.9. Taxes.

5.9.1 The **Contractor** shall pay all sales, consumer, use, and other similar taxes for the Work or portions thereof which are provided by the **Contractor** which are legally enacted when bids are received, whether or not yet effective or merely scheduled to go into effect. However, the **Contractor** shall not pay, and the **City** shall not reimburse or pay the **Contractor** for, any sales taxes for building supplies or materials for which an exemption is provided in M.G.L. c. 64H, §6(f). The **City's** tax exemption number to be used by the **Contractor** in this regard is E04-600-1414.

5.10. Permits, Licenses, and Fees.

5.10.1 Unless otherwise provided, the **Contractor** shall obtain and pay the fees for all permits, licenses, and inspections that are necessary for the proper execution and completion of the Work and which are customarily secured after execution of the Contract and which are legally required. All fees for permits, licenses, and inspections required by any **City** department shall be waived. Unless otherwise agreed by the Awarding Authority in writing, the Contractor shall, prior to commencement of the work, (i) meet with the City of Somerville Inspectional Services Department to determine what permits are needed for the work; (ii) obtain all such permits; and (iii) provide copies of such permits to the Awarding Authority. Permits shall include, without limitation, demolition, foundation, digsafe, and building permits; permits for removal, sealing up, or installation of utilities, including gas, electrical, water and sewer; and permits for obstructing public streets and sidewalks.

5.11. Notices Required By Statutes, Ordinances, Codes, Rules, Regulations, and Orders of the City.

5.11.1 The **Contractor** shall give notices required by statutes, ordinances, codes, rules, regulations, and orders of the **City** bearing on performance of the Work.

5.12. Additional Information from Design Professional.

5.12.1. The **Contractor** shall perform the Work in accordance with the Contract Documents and submittals approved pursuant to Article 4.

5.12.2. The **Contractor** shall give the **Design Professional** timely notice of any additional Plans, Specifications, or instructions required to define the Work in greater detail, or to permit the proper progress of the Work.

5.12.3. The **Contractor** shall not proceed with any Work not clearly and consistently defined in detail in the Contract Documents, but shall request additional drawings or instructions from the **Design Professional** as provided in the previous Paragraph. If the **Contractor** proceeds with such Work without obtaining further drawings, Specifications, or instructions, the **Contractor** shall correct Work incorrectly done at the **Contractor's** own expense.

5.13. "Or equal."

5.13.1. Requirements for Substitutions. (*Reference:* M.G.L. c. 30, §39M(b).) Where products or materials are prescribed by manufacturer name, trade name, or catalog reference, the words "or approved equal" shall be understood to follow. An item shall be considered equal to the item so named or described if, in the opinion of the **Design Professional**:

5.13.1.1. it is at least equal in quality, durability, appearance, strength, and design;

5.13.1.2. it performs at least equally the function imposed by the general design for the Work;

5.13.1.3. it conforms substantially, even with deviations, to the detailed requirements for the items as indicated by the Specifications.

5.13.2. Net Savings. No proposed substitution will be permitted unless the **Contractor** certifies that the proposed substitution will yield a net savings to the **City** and will not extend the Contract Time.

5.13.3. Contractor's Expense. Any structural or mechanical changes made necessary to accommodate substituted

equipment under this paragraph (including but not limited to engineering fees) shall be at the expense of the **Contractor** or **Subcontractor** responsible for the Work item.

5.13.3.1. Any additional cost, or any loss or damage arising from the substitution of any material or any method for those originally specified shall be borne by the **Contractor**, notwithstanding approval or acceptance of such substitution by the **City** or the **Design Professional**, unless such substitution was made at the written request or direction of the **City** or the **Design Professional**.

5.13.3.2. All data to be provided by the **Contractor** in support of any proposed "or equal" or substitute item will be at the **Contractor's** expense.

5.13.4. Meeting Requirements. The **Contractor** shall be responsible for determining that all materials furnished for the Work meet all requirements of the Contract Documents. The **Design Professional** may require the **Contractor** to produce reasonable evidence that a material meets such requirements, such as certified reports of past tests by qualified testing laboratories, reports of studies by qualified experts, or other evidence which, in the opinion of the **Design Professional,** would lead to a reasonable certainty that any material used, or proposed to be used, in the Work meets the requirements of the Contract Documents. All such data shall be furnished at the **Contractor's** expense. This provision shall not require the **Contractor** to pay for periodic testing of different batches of the same material, unless such testing is specifically required by the Contract Documents to be performed at the **Contractor's** expense.

5.13.5. Named Manufacturer's Product. In all cases in which a manufacturer's name, trade name, or other proprietary designation is used in connection with materials or articles to be furnished under this Contract, whether or not the phrase "or equal" is used after such name, the **Contractor** shall furnish the product of the name manufacturer(s) without substitution, unless a written request for a substitute has been submitted by the **Contractor** and approved in writing by the **Design Professional** as provided in the following paragraph.

5.13.6. Deviations. If the **Contractor** proposes to use a material which while suitable for the intended use, deviates in any way from the detailed requirements of the Contract Documents, the **Contractor** shall inform the **Design Professional** in writing of the nature of such deviations at the time the material is submitted for approval and shall request written approval of the deviation from the requirements of the Contract Documents.

5.13.7. Rejection of Deviations. In requesting approval of deviations or substitutions, the **Contractor** shall provide, upon request, evidence leading to a reasonable certainty that the proposed substitution or deviation will provide a quality of result at least equal to that otherwise attainable. If, in the opinion of the **Design Professional**, the evidence presented by the **Contractor** does not provide a sufficient basis for such reasonable certainty, the **Design Professional** may reject such substitution or deviation without further investigation.

5.13.8. Consistent Character and Quality of Design. The Contract Documents are intended to produce a building of consistent character and quality of design. All components of the building including visible items of mechanical and electrical equipment have been selected to have a coordinated design in relation to the overall appearance of the Project. The **Design Professional** shall judge the design and appearance of proposed substitutes on the basis of their suitability in relation to the overall design of the Project, as well as for their intrinsic merits. The **Design Professional** will not approve as equal to materials specified proposed substitutes that, in the **Design Professional's** opinion, would be out of character, obtrusive, or otherwise inconsistent with the character or quality of design of the Project. In order to permit coordinated design of color and finishes the **Contractor** shall, if required by the **Design Professional**, furnish the substituted material in any color, finish, texture, or pattern which would have been available from the manufacturer originally specified, at no additional cost to the **City**.

5.13.9. Warranty. The warranties provided herein shall be in addition to and not in limitation of any other warranty required by the Contract Documents or otherwise prescribed by law.

5.13.10. Design Professional's Approval. The **Design Professional** will be the sole judge of acceptability. No "or equal" or substitute will be ordered, installed, or utilized without the **Design Professional's** prior written acceptance which will be evidenced by either a Change Order or an approved Shop Drawing. The **City** may require the **Contractor** to furnish at the **Contractor's** expense a special performance guarantee or other surety with respect to any "or equal" or substitute. The **Design Professional** will record the time required by the **Design Professional** and its consultants in evaluating substitutes proposed or submitted by the **Contractor** and in making changes in the Contract Documents (or in the provisions of any other direct contract with the **City** for work on the Project) occasioned thereby. Whether or not the **Design Professional** accepts a substitute item so proposed or submitted by the **Contractor**, the **Contractor** shall reimburse the **City** for the charges of the **Design Professional** and its consultants for evaluating each such proposed substitute item.

5.14. Substitute Construction Methods or Procedures.

5.14.1 If a specific means, method, technique, sequence, or procedure of construction is shown or indicated in and expressly required by the Contract Documents, the **Contractor** may furnish or utilize a substitute means, method, technique, sequence or procedure of construction acceptable to the **Design Professional**. The **Contractor** shall submit sufficient information to allow the **Design Professional**, in the **Design Professional's** sole discretion, to determine whether the substitute

proposed is equivalent to that expressly called for by the Contract Documents.

5.15. Contractor's Progress Schedule.

5.15.1. Before Starting Construction. Within ten (10) days after the date of the Notice to Proceed, the **Contractor** shall submit to the **Design Professional** for review:

5.15.1.1. a preliminary progress schedule indicating the times (number of days or dates) for starting and completing the various stages of the Work;

5.15.1.2. a preliminary schedule of Shop Drawing and Sample submittals which will list each required submittal and the times for submitting, reviewing, and processing such submittal; and

5.15.1.3. a refined schedule of values for all of the Work which will include quantities and prices of items aggregating the Contract Sum and will subdivide the Work into component parts in sufficient detail to serve as the basis for progress payments during construction. Such prices will include an appropriate amount of overhead and profit applicable to each item of Work.

5.15.2. Review of Progress Schedule. At least ten (10) days prior to the commencement of construction, the **Design Professional**, the **Contractor,** and any other appropriate persons will meet to review and discuss the acceptability to the **Design Professional** of the progress schedule. The **Contractor** will have an additional ten (10) days to make corrections and adjustments and to complete and resubmit the schedule. No progress payment shall be made to the **Contractor** until the schedule is submitted to and found acceptable by the **Design Professional** as provided below.

5.15.3. Acceptability of Progress Schedule. The progress schedule will be acceptable to the **Design Professional** if, according to the **Design Professional**, it provides an orderly progression of the Work to completion within any specified time frame, but such acceptance will neither impose on the **Design Professional** responsibility for the sequencing, scheduling, or progress of the Work nor interfere with or relieve the **Contractor** from the **Contractor's** full responsibility therefore. The **Contractor's** schedule of Submittals must be acceptable to the **Design Professional** in providing a workable arrangement for reviewing and processing the required Submittals. The **Contractor's** schedule of values must be acceptable to the **Design Professional** as to form and substance.

5.15.4. Sepia and Copies. After the **Design Professional** has approved the schedule, the **Contractor** shall submit to the **Design Professional** one (1) sepia and four (4) copies bearing the **Contractor's** stamp of approval as a representation to the **City** that the **Contractor** has determined or verified all data on that progress schedule and that the **Contractor**, the Subcontractors and Suppliers have reviewed and coordinated the sequences in that progress schedule with the requirements of the Work.

5.15.5. Adjustment of Schedule. The **Contractor** shall adhere to the established progress schedule which may be adjusted from time to time as follows: the **Contractor** shall submit to the **Design Professional** for acceptance proposed adjustments in the progress schedule that will not change the Contract Time. Such adjustments will conform generally to the progress schedule then in effect and will comply with any provisions of the requirements applicable thereto.

5.15.6. During Construction. The **Contractor** shall submit monthly progress schedules to the **Design Professional**. The schedules shall stay current with the **Contractor's** approach to the Work remaining.

5.15.7. Schedule of Submittals. The **Contractor** shall prepare and keep current, for the **Design Professional's** approval, a schedule of Submittals that is coordinated with the **Contractor's** construction schedule and allows the **Design Professional** reasonable time to review Submittals.

5.16. Project Coordination.

5.16.1. In General. The **Contractor** shall be responsible for the proper coordination of the Work of all of the trades.

5.16.2. Coordination with Subcontractors. The **Contractor** shall coordinate the work of each Subcontractor with the Work of every other Subcontractor whose Work affects the other.

5.16.3. Coordination with the City's Own Forces or Separate Contractors. The **Contractor** shall coordinate its operations with those of the **City's** own forces or separate contractors. The **Contractor** shall provide the **City's** own forces and separate contractors a reasonable opportunity for the handling, unloading and storage of their materials and equipment and execution of their work. The **Contractor** shall connect and coordinate its Work with theirs.

5.16.4. Coordination with Utility Companies. The **Contractor** shall coordinate its operations with all the appropriate utility companies to assure that the utilities required on the Project are available and functioning properly pursuant to the requirements of the Contract Documents.

5.17. Project Photographs.

5.17.1. In General. The **Contractor** shall take, at its own expense, interior and exterior photographs at the site, from different vantages as directed by the **Design Professional** or the **City**, before beginning any Work and thereafter, at a minimum, on the first work day of each month until final completion of the Work, including final Site photos. Photos shall be taken of any

Work that will be buried or concealed while the Work is still exposed. The photographs shall be taken by a skilled commercial photographer. The number of photographs required shall be at the discretion of the **City** or the **Design Professional**. One aerial photo shall be required a) prior to commencement of the work and b) at the completion of the work. See Section 01320 – Construction Progress Documentation.

5.17.2. Prints and Digital Media. Within fourteen (14) days after the photographs have been taken, the **Contractor** shall cause prints to be made and delivered to the **City** and the **Design Professional**. All photographs shall be 8" x 10". Each print shall state the date of the photograph, the name of the Project, the description of the view and the name and address of the photographer. The **City** shall receive one glossy print of each photo as well as all prints in digital form on compact disc. The **Design Professional** shall receive one glossy print.

5.17.3. Failure to Comply. Should the **Contractor** fail to adhere to any requirement set forth in the previous two paragraphs, the **City** may have the photographs taken at the **Contractor's** expense or receive a set-off against the **Contractor's** next application for payment.

5.18. Record Documents and Samples at the Site.

5.18.1 The **Contractor** shall maintain in a safe place at the site one record copy of all Plans, Specifications, Modifications, Change Orders, **Construction Change** Directives, Field Orders and written interpretations and clarifications in good order and annotated to show all changes made during construction. These record documents together with all approved Samples and a counterpart of all approved Shop Drawings will be available to the **Design Professional** for reference. Upon completion of the Work, these record documents, Samples and Shop Drawings will be delivered by the **Contractor** to the **Design Professional** for the **City**.

5.19. Submittals.

5.19.1. Purpose. The purpose of Submittals is to demonstrate for those portions of the Work for which Submittals are required the way the **Contractor** proposes to conform to the information given and the design concept expressed in the Contract Documents.

5.19.2. Submittal Procedure. Within ten (10) days from the Notice to Proceed, the **Contractor** shall submit to the **Design Professional** a completed Submittals schedule. The **Contractor** shall review, approve, and submit to the **Design Professional** Submittals required by the Contract Documents with reasonable promptness and in such sequence as to cause no delay in the Work or in the activities of the **City** or of separate contractors. Submittals made by the **Contractor** that are not required by the Contract Documents may be returned without action. The schedules shall be updated and resubmitted each month. All Submittals will be identified as the **Design Professional** may require and in the number specified in the General Requirements. The data shown on the Shop Drawings will be complete with respect to quantities, dimensions, specified performance and design criteria, materials, and similar data to show the **Design Professional** the materials and equipment that the **Contractor** proposes to provide and to enable the **Design Professional** to review the information for the limited purposes stated below.

5.19.3. Samples. The **Contractor** shall also submit Samples to the **Design Professional** for review and approval in accordance with said accepted schedule of Submittals. Each Sample will be identified clearly as to material, Supplier, pertinent data such as catalog numbers and the use for which it is intended and otherwise as the **Design Professional** may require to enable the **Design Professional** to review the Submittal for the limited purposed stated below. The numbers of each Sample to be submitted will be as specified in the Specifications. Unless otherwise specified in the Specifications, three (3) specimens of each Sample shall be submitted.

5.19.3.1. The Samples shall be of sufficient size to permit proper evaluation of material. Where variations in color or other characteristics are to be expected, samples showing the minimum range of variation shall be submitted. Materials exceeding the range of variation of the approved Samples will not be approved on the Work.

5.19.3.2. All costs associated with delivery of Samples will paid by the **Contractor**.

5.19.4. Contractor's Verifications. Before submitting each Submittal, the **Contractor** shall have determined and verified:

5.19.4.1. all field measurements, quantities, dimensions specified performance criteria, installation requirements, materials, catalog numbers, and similar information with respect thereto;

5.19.4.2. all materials with respect to intended use, fabrication, shipping, handling, storage, assembly, and installation pertaining to the performance of the Work; and

5.19.4.3. all information relative to the **Contractor's** sole responsibilities in respect of means, methods, techniques, sequences, and procedures of construction and safety precautions and programs incident thereto.

5.19.5. Contractor's Representations. By approving and providing Submittals, the **Contractor** thereby represents that the **Contractor** has determined and verified all dimensions, quantities, field dimensions, relations to existing Work, coordination with Work to be installed later, coordination with information on previously accepted Submittals and verification of

compliance with all the requirements of the Contract Documents. The accuracy of all such information is the responsibility of the **Contractor**. In reviewing Submittals, the **Design Professional** shall be entitled to rely upon the **Contractor's** representation that such information is correct and accurate.

5.19.6. Coordination. The **Contractor** shall also have reviewed and coordinated each Submittal with other Submittals and with the requirements of the Work and the Contract Documents.

5.19.7. Stamp or Specific Written Indication. Each Submittal will bear a stamp or specific written indication that the **Contractor** has satisfied the **Contractor's** obligations under the Contract Documents with respect to the **Contractor's** review and approval of that Submittal.

5.19.8. Written Notice of Variations. At the time of each Submittal, the **Contractor** shall give the **Design Professional** specific written notice of such variations, if any, that the Submittal may have from the requirements of the Contract Documents. Such notice is to be in a written communication separate from the Submittal. Moreover, the **Contractor** shall make a specific notation on each Submittal to the **Design Professional** for review and approval of each such variation.

5.19.9. Review and Approval by the Design Professional. The **Contractor** shall perform no portion of the Work requiring a Submittal until the respective Submittal has been approved by the **Design Professional**. Such Work shall be in accordance with approved Submittals.

5.19.9.1. The **Design Professional** will review and approve Submittals in accordance with the schedule of Submittals accepted by the **Design Professional** as required above. The **Design Professional's** review and approval will be only to determine if the items covered by the Submittals will, after installation or incorporation in the Work, conform to the information given in the Contract Documents and be compatible with the design concept of the completed Project as a functioning whole as indicated in the Contract Documents. The **Design Professional's** review and approval will not extend to means, method, technique, sequences, or procedures of construction (except where a particular means, method, technique, sequences or procedures of construction is specifically and expressly called for by the Contract Documents) or to safety precautions or programs incident thereto. The review and approval of a separate item as such will not indicate approval of the assembly in which the item functions.

5.19.10.Deviations. The **Contractor** shall not be relieved of responsibility for deviations from requirements of the Contract Documents by the **Design Professional's** approval of Submittals unless the **Contractor** has specifically informed the **Design Professional** in writing of such deviation at the time of Submittal and the **Design Professional** has given written approval to the specific deviation. The **Contractor** shall not be relieved of responsibility for errors or omissions in Submittals by the **Design Professional's** approval thereof.

5.19.11.Revisions. The **Contractor** shall make corrections required by the **Design Professional** and shall return the required number of corrected copies of Submittals and submit as required new Submittals for review and approval. The **Contractor** shall direct specific attention, in writing or on resubmitted Submittals, to revisions other than those requested by the **Design Professional** on previous Submittals. Unless such written notice has been given, the **Design Professional's** approval of a resubmitted Submittal shall not constitute approval of any changes not requested on the prior Submittal.

5.19.12.Related Work. Where a Submittal is required by the Contract Documents or the schedule of Submittals accepted by the **Design Professional**, any related Work performed prior to the **Design Professional's** review and approval of the pertinent Submittal will be at the sole expense and responsibility of the **Contractor**.

5.19.13.Informational Submittals. Informational Submittals upon which the **Design Professional** is not expected to take responsive action may be so identified in the Contract Documents.

5.19.14.Certification. When professional certification of performance criteria of materials, systems or equipment is required by the Contract Documents, the **City** shall be entitled to rely upon such certifications, and neither the **City** nor the **Design Professional** shall be expected to make any independent examination with respect thereto.

5.20. Continuing the Work.

5.20.1. The **Contractor** shall carry on the Work and adhere to the progress schedule during all disputes or disagreements with the **City**. No Work shall be delayed or postponed pending resolution of any disputes or disagreements, except as otherwise provided herein or as the **City** and the **Contractor** may agree in writing.

5.21. Use of Site; Access to Work.

5.21.1. The right of possession of the premises and the improvements made thereon by the **Contractor** shall remain at all times in the **City**. The **Contractor's** right to entry and use thereof arises solely from the permission granted by the **City** under the Contract Documents. The **Contractor** shall confine the **Contractor's** apparatus, the storage of materials, and the operations of the **Contractor's** workers to limits indicated by law, ordinance, the Contract Documents and permits and/or directions of the **Design Professional** and shall not unreasonably encumber the premises with the **Contractor's** materials. The **City** shall not be liable to the **Contractor**, the Subcontractors, Suppliers, or anyone else with respect to the conditions of the premises, except for a condition caused directly and solely by the negligence of the **City**.

5.21.2. At all times, the **City** and the **Design Professional** shall have access to the Work.

5.22. Protection of Persons and Property.

5.22.1. In General. The **Contractor** shall be responsible for initiating, maintaining, and supervising all health and safety precautions and programs in connection with the performance of the Contract. The **Contractor** is responsible for the implementation of all Federal, State, and local health and safety requirements. The Contractor shall be responsible for all damages to persons or property that occur as a result of the Contractor's fault or negligence in connection with the prosecution of the work and shall be responsible for the proper care and protection of all materials delivered and work performed until completion and final acceptance by CONTRACTING DEPARTMENT (AS STATED ON THE FIRST PAGE OF THE AGREEMENT).

The Contractor shall provide sufficient competent watchmen, both day and night, including Saturdays, Sundays and holidays, as necessary, from the time the work is commenced until final completion and acceptance. Sufficient lighting shall be provided to aid in the prevention of injury to passersby or vandalism to the property or other illegal activities.

The Contractor shall avoid damage as a result of its operations to existing sidewalks, streets, curbs, pavements, utilities (except those which are to be replaced or removed), adjoining property, etc. and the Contractor shall at its own expense completely repair any damage thereto caused by its operations.

The Contractor shall shore up, brace, underpin, secure, and protect as may be necessary, all foundations and other parts of existing structure adjacent to, adjoining, and in the vicinity of the site, which may be in any way affected by the excavations or other operations connected with the construction of the improvements embraced in this Contract. The Contractor shall be responsible for the giving of any and all required notices to any adjoining or adjacent property owner or other party before the commencement of work. The Contractor shall indemnify and save harmless the City of Somerville and CONTRACTING DEPARTMENT (AS STATED ON THE FIRST PAGE OF THE AGREEMENT) from any liability for damages on account of settlement or the loss of lateral support of adjoining property resulting from the Contractor's failure to comply with this section.

5.22.1.1. If this contract is in excess of $100,000 and is federally funded, the Contractor shall comply with all applicable standards, orders, or regulations issued pursuant to the Clean Air Act (42 U.S.C. 7401 et seq.) and the Federal Water Pollution Control Act as amended (33 U.S.C. 1251 et seq.)

5.22.1.2. If this contract is in excess of $2,000 and is federally funded, the Contractor shall comply with Sections 103 and 107 of the Contract Work Hours Safety Standards Acts (40 U.S.C. 327-333), as supplemented by Department of Labor regulations at 29 CFR part 5. To that end, the Contractor shall compute the wages of every mechanic and laborer on the basis of a standard workweek of 40 hours. Work in excess of the standard workweek is permissible, provided that the worker is compensated at a rate of not less than 1-1/2 times the basic rate of pay for all hours worked in excess of 40 hours in the workweek. The Contractor shall ensure that no laborer or mechanic is required to work in surroundings or under working conditions which are unsanitary, hazardous, or dangerous.

5.22.2. The **Contractor** shall take reasonable precautions for safety of, and shall provide reasonable protection to prevent damage, injury, or loss to:

5.22.2.1. employees on the site and other persons who may be affected thereby;

5.22.2.2. the Work, materials, and equipment to be incorporated therein, whether in storage on or off the site, under the care, custody or control of the **Contractor**, Subcontractors, or Sub-subcontractors;

5.22.2.3. other property at the site or adjacent or in close proximity thereto, such as trees, shrubs, lawns, walks, pavements, roadways, structures, and utilities not designated for removal, relocation, or replacement in the course of construction; and

5.22.2.4. any other property of the **City**, whether or not forming part of the Work, located at the site or adjacent thereto in areas to which the **Contractor** has access.

5.22.3. Notices and Compliance. The **Contractor** shall give notices and comply in all other respects with applicable laws, ordinances, rules, regulations, codes, and lawful orders of public authorities bearing on the safety of persons or property or their protection from damage, injury, or loss. The **Contractor** shall notify owners of adjacent and nearby properties of underground facilities and utility owners when prosecution of the Work may affect them and shall cooperate with them in the protection, removal, relocation, and replacement of their property.

5.22.3.1. Should the Contractor in the execution of his work uncover or discover utility service lines not indicated on the relevant drawings, or that do not show signs of singular service to any existing structures being demolished, the Contractor shall cease work in that area immediately and promptly notify the Public Works Department. Within forty-eight hours, the Public Works Department will inspect the site and issue written instructions to the Contractor. The Contractor shall proceed

with only after such written instructions have been received and shall proceed in full compliance with such instructions. The above mentioned situation or similar circumstances and/or modification if any, shall not relieve the Contractor from his responsibilities in this Contract and also it is without prejudice to any and all rights of CONTRACTING DEPARTMENT (AS STATED ON THE FIRST PAGE OF THE AGREEMENT) covering this said contract and surety or bonds.

5.22.4. Erection and Maintenance of Safeguards. The **Contractor** shall erect and maintain, as required by existing conditions and the terms of the Contract, reasonable safeguards for safety and protection, including posting danger signs and other warnings against hazards, promulgating safety regulations, and notifying owners and users of adjacent and nearby sites and utilities.

5.22.5. Hazardous Materials and Equipment. When use or storage of explosives or other hazardous materials or equipment or unusual methods are necessary for execution of the Work, the **Contractor** shall exercise utmost care and carry on such activities under the supervision of properly qualified personnel.

5.22.6. Damage to Property. The **Contractor** shall promptly remedy damage and loss to property referred to above. If the damage or loss is due in whole or in part to the **Contractor's** failure to take the precautions required herein, the **Contractor** shall bear the cost, subject to any reimbursement to which the **Contractor** is entitled under property insurance required by the Contract Documents. The **Contractor** shall be fully and solely responsible for all Work and other operations carried out on adjacent properties. The insurance required under Article 8 shall cover such Work or operations, and the **Contractor** shall indemnify and defend the **City**, the **Design Professional**, and the owners of such adjacent or nearby properties from and against all claims, suits, losses, or costs arising out of such Work or operations.

5.22.7. Fire Protection Equipment and Services. The **Contractor** shall provide and maintain in good operating condition suitable and adequate fire protection equipment and services and shall comply with all reasonable recommendations regarding fire protection made by the representatives of the fire insurance company carrying insurance on the Work or by the local fire chief or fire marshal. The area within the site limits shall be kept orderly and clean and all combustible rubbish shall be promptly removed from the site.

5.22.8. Protection of Excavations, Trenches, etc. The **Contractor** shall at all times protect excavations, trenches, buildings and materials from rain water, ground water, backup or leakage of sewers, drains and other piping, and from water of any other origin and shall remove promptly any accumulation of water. The **Contractor** shall provide and operate all pumps, piping, and other equipment necessary to this end.

5.22.9. Snow and Ice Removal. The **Contractor** shall remove snow and ice that might result in damage or delay.

5.22.10. Safety Representative. The **Contractor** shall designate a qualified and experienced safety representative at the site whose duties and responsibilities shall be the prevention of accidents and the maintaining and supervising of safety precautions and programs.

5.22.11. Weather Protection. (*Reference:* M.G.L. c. 149, §44F(1).) The **Contractor** shall install weather protection and furnish adequate heat in the protected area from November 1 through March 31. In the event of temporary suspension of work, during inclement weather, the Contractor will carefully protect and will cause his subcontractors to carefully protect all work and materials against damage or injury from the weather. If, in the opinion of the Design Professional or CONTRACTING DEPARTMENT (AS STATED ON THE FIRST PAGE OF THE AGREEMENT), any work or materials shall have been damaged or injured by reason of failure on the part of the Contractor or any of his Subcontractors so to protect the work, such work or materials shall be removed and replaced at the expense of the Contractor. These Specifications are not to be construed as requiring enclosures or heat for operations that are not economically feasible to protect in the judgment of CONTRACTING DEPARTMENT (AS STATED ON THE FIRST PAGE OF THE AGREEMENT). Included in the preceding category, without limitation, are such items as site work, excavation, pile driving, steel erection, erection of certain "exterior" wall panels, roofing, and similar operation:

(1) "WEATHER PROTECTION" shall mean the temporary protection of that work adversely affected by moisture, wind and cold, by covering, enclosing and/or heating.

This protection shall provide adequate working areas during the months of November through March as determined by the Design Professional and consistent with the approved construction schedule to permit the continuous progress of all work necessary to maintain an orderly and efficient sequence of construction operations. The General Contractor shall furnish and install all "Weather Protection" material and be responsible for all costs, including heating required to maintain a minimum temperature of 40 degrees F, at the working surface. This provision does not supersede any specific requirements for methods of construction, curing of materials or the applicable General Conditions set forth in the Contract Articles with added regard to performance obligations of the Contractor.

(2) Within 30 calendar days after his award of contract, the General Contractor shall submit in writing to CONTRACTING DEPARTMENT (AS STATED ON THE FIRST PAGE OF THE AGREEMENT) for approval, three copies of his proposed methods for "Weather Protection".

(3) Installation of weather protection and heating devices shall comply with all safety regulations including provisions for

adequate ventilation and fire protection devices. Heating devices which may cause damage to finish surfaces shall not be used.

(4) The General Contractor shall furnish and install one accurate Fahrenheit thermometer at each work area as designated by the Designer. However, one additional accurate Fahrenheit thermometer shall be provided for every 2,000 square feet of floor space where the work areas exceed 2,000 square feet.

5.22.12. Security. The **Contractor** shall provide, within the Contract Sum, a sufficient number of security personnel at the Site at all times when the **Contractor's** personnel are not present, from commencement of the Work until Substantial Completion to assure that the Site, the facility, and the Work, and all materials and equipment stored at the Site are fully and completely protected against loss or damage due to vandalism, theft, or malicious mischief. If the **Contractor** elects, in addition, to use guard dogs for this purpose, each dog shall at all times be accompanied by an adult handler. If the **Contractor** fails to comply with the requirements of this paragraph, then the **City** may provide appropriate security and charge the cost thereof to the **Contractor**. The **City's** provision of such security, or failure to do so, shall not relieve the **Contractor** of its responsibility to pay for loss or damage due to vandalism, theft, or malicious mischief at the Site.

5.22.13. Hazard Communication Programs. The **Contractor** shall be responsible for coordinating any exchange of material safety data sheets or other hazard communications information required to be made available to or exchanged between or among employers at the site in accordance with laws, codes and regulations.

5.22.14. Noise Pollution Control. The **Contractor** shall comply with all applicable provisions of Somerville Municipal Code §9-109.

5.23. Cutting and Patching.

5.23.1. In General. Unless otherwise provided in the Contract Documents, the **Contractor** shall be responsible for cutting, fitting, or patching required to complete the Work or to make its parts fit together properly, including the work of the City or of separate contractors.

5.23.2. Damage to Work of City or of Separate Contractor. The **Contractor** shall not damage or endanger a portion of the Work or fully or partially completed construction of the **City** or separate contractors by cutting, patching, or otherwise altering such construction, or by excavation. The **Contractor** shall not cut or otherwise alter such construction by the **City** or a separate contractor except with prior written consent of the **City** and of such separate contractor; such consent shall not be unreasonably withheld. The **Contractor** shall not unreasonably withhold from the **City** or a separate contractor the **Contractor's** consent to cutting or otherwise altering the Work.

5.23.3. Damage Caused by Contractor. Should the **Contractor** cause damage to the work or property of any separate contractor at the Site, or should any claim arising out of the **Contractor's** performance of Work at the Site be made by any separate contractor against the **Contractor**, the **City**, the **Design Professional**, or any of the **Design Professional's** consultants, the **Contractor** shall promptly attempt to settle with such other contractor by agreement, or to otherwise resolve the dispute by arbitration or at law. The **Contractor** shall, to the fullest extent permitted by laws and regulations, indemnify and hold harmless the **City**, the **Design Professional**, and the **Design Professional's** consultants from and against all claims, damages, losses and expenses (including, but not limited to, fees of the Design Professional, the Design Professional's consultants,, attorneys, and other professionals, and court and arbitration or mediation costs) arising directly, indirectly or consequentially out of any action, legal or equitable, brought by any separate contractor against the **City**, the **Design Professional**, or any of the **Design Professional's** consultants, to the extent based on a claim arising out of the **Contractor's** performance of the Work. Should a separate contractor cause damage to the Work or property of the **Contractor** or should the performance of work by any separate contractor at the site give rise to any other claim, the **Contractor** shall not institute any action, legal or equitable, against the **City**, the **Design Professional**, or any of the **Design Professional's** consultants, or permit any action against any of them to be maintained and continued in its name or for its benefit in any court or before any arbiter which seeks to impose liability on or to recover damages from the **City**, the **Design Professional**, or any of the **Design Professional's** consultants, on account of any such damage or claim. If the **Contractor** delays at any time in performing or furnishing Work by any act or neglect of a separate contractor and the City and the Contractor are unable to agree as to the extent of any adjustment in the Contract Time attributable thereto, the **Contractor** may make a claim for an extension of time in accordance with Article 16. An extension of the Contract Time shall be the **Contractor's** exclusive remedy with respect to the **City**, the **Design Professional**, and the **Design Professional's** consultants, for any delay, disruption, interference, or hindrance caused by any separate contractor.

5.24. Cleaning Up.

5.24.1. During the progress of the Work, the **Contractor** shall keep the premises and surrounding area free from accumulation of waste materials and rubbish caused by operations under the Contract or other debris. At the completion of the Work, the **Contractor** shall remove from and about the Project all waste materials, rubbish, and debris, and the **Contractor's** tools, construction equipment, machinery, and surplus materials. Surplus materials to be provided to the **City** by specifications shall be stored in a clean, safe and secure area as directed by the **City**. The **Contractor** shall leave the site clean and ready for

occupancy by the **City** at Substantial Completion of the Work. Immediately prior to the **Design Professional's** inspection for Substantial Completion, the **Contractor** shall completely clean the premises. Concrete and ceramic surfaces shall be cleaned and washed. Resilient coverings shall be cleaned, waxed and buffed. Woodwork shall be dusted and cleaned. Sash, fixtures and equipment shall be thoroughly cleaned. Stains, spots, dust, marks and smears shall be removed from all surfaces. Hardware and all metal surfaces shall be cleaned and polished. Glass and plastic surfaces shall be thoroughly cleaned by professional window cleaners. All damaged, broken or scratched glass or plastic shall be replaced by the **Contractor** at the **Contractor's** expense. The **Contractor** shall restore to original condition all property not designated for alteration by the Contract Documents.

5.24.2. If the **Contractor** fails to clean up as provided herein, the **City** may do so and charge the cost thereof to the **Contractor**.

5.25. Royalties and Patents.

5.25.1 The **Contractor** shall pay all license fees and royalties and assume all costs incident to the use in the performance of the Work or the incorporation in the Work of any invention, design, process, product, or device which is the subject of patent rights or copyrights held by others. To the fullest extent permitted by law, the **Contractor** shall indemnify and hold harmless the **City** and the **Design Professional** from and against all claims, costs, losses, and damages arising out of or resulting from any infringement of patent rights or copyrights incident to the use in the performance of the work or resulting from the incorporation in the work of any invention, design, process, product, or device not specified in the Contract Documents.

5.26. Contractor's Obligation to Perform.

5.26.1. The **Contractor's** obligation to perform and complete the Work in accordance with the Contract Documents is absolute. None of the following will constitute an acceptance of Work that is not in accordance with the Contract Documents or a release of the **Contractor's** obligation to perform the Work in accordance with the Contract Documents:

5.26.1.1. observations by the **Design Professional**;

5.26.1.2. recommendation of any progress or final payment by the **Design Professional**;

5.26.1.3. the issuance of a certificate of Substantial Completion or any payment by the **City** to the **Contractor** under the Contract Documents;

5.26.1.4. use or occupancy of the Work, Project, or Site, or any part thereof, by the **City**;

5.26.1.5. any acceptance by the **City** or any failure to do so;

5.26.1.6. any review and approval of a Shop Drawing or Sample submittal or the issuance of a notice of acceptance by the **Design Professional**;

5.26.1.7. any inspection, test, or approval by others; or

5.26.1.8. any correction of defective Work by the **City**.

5.27. Indemnification; and Covenant Not To Sue.

5.27.1. To the fullest extent permitted by law, the **Contractor** shall assume the defense of, indemnify and hold harmless the **City**, the **Design Professional**, the **Design Professional's** consultants, and agents and employees of any of them, from and against claims, suits, causes of action, demands, liabilities, damages, losses, and expenses, including, but not limited, to attorneys' fees, arising out of or resulting from performance of the Work, provided that such claim, damage, loss, or expense is attributable to bodily injury, sickness, disease, or death, or to injury to or destruction of tangible property (other than the Work itself) including loss of use resulting therefrom, caused in whole or in part by alleged negligent acts or omissions of the **Contractor**, a Subcontractor, anyone directly or indirectly employed by them, or anyone for whose acts they may be liable, regardless of whether or not such claim, damage, loss, or expense is caused in part by a party indemnified hereunder. Such obligation shall not be construed to negate, abridge, or reduce other rights or obligations of indemnity which would otherwise exist as to a party or person described in this paragraph.

5.27.2. In claims against any person or entity indemnified under the foregoing paragraph by an employee of the **Contractor**, a Subcontractor, anyone directly or indirectly employed by them or anyone for whose acts they may be liable, the indemnification obligation under the foregoing paragraph shall not be limited by a limitation on the amount or type of damages, compensation or benefits payable by or for the **Contractor** or a Subcontractor under Workers' Compensation laws, disability benefit acts or other employee benefit acts.

5.27.3. The obligations of the **Contractor** in this Article shall not extend to the liability of the **Design Professional**, the **Design Professional's** consultants, and agents or employees of any of them arising out of (1) the preparation of maps, Plans, opinions, reports, surveys, Change Orders, designs, or Specifications, or (2) directions or instructions given by the **Design Professional**, the **Design Professional's** consultants and agents or employees of any of them, provided such instructions or directions are the primary cause of the injury or damage.

5.27.4. The **Contractor**, or any successor, assign, or subrogee of the **Contractor** agrees not to bring any civil suit,

action, or other proceeding in law, equity or arbitration against the **Design Professional**, or the officers, employees, agents, or consultants of the **Design Professional**, for the enforcement of any action which the **Contractor** may have arising out of or in any manner connected with the Work. The **Contractor** shall assure that this covenant not to sue is contained in all subcontracts and sub-subcontracts of every tier and shall assure its enforcement. The **Design Professional**, its officers, employees, agents, and consultants are intended third-party beneficiaries of this covenant not to sue, and are entitled to enforce this covenant in law or equity.

5.28. Survival of Obligations.

5.28.1 All representations, indemnifications, warranties, and guarantees made in, required by or given in accordance with the Contract Documents, as well as all continuing obligations indicated in the Contract Documents, will survive final payment, completion and acceptance of the Work and termination or completion of the Contract.

ARTICLE 6
SUBCONTRACTORS

6.1 Use of Subcontractors.

The **Contractor** shall use the Subcontractors named in the **Contractor's** Bid. The Contractor shall not award any work to any Subcontractor without prior written approval of the CONTRACTING DEPARTMENT (AS STATED ON THE FIRST PAGE OF THE AGREEMENT). The Contractor shall not award any work to any subcontractor without prior written approval of CONTRACTING DEPARTMENT (AS STATED ON THE FIRST PAGE OF THE AGREEMENT), which approval will not be given until the Contractor submits a written approval statement concerning the proposed award to the subcontractor, which statement shall contain such information as CONTRACTING DEPARTMENT (AS STATED ON THE FIRST PAGE OF THE AGREEMENT) may require. All subcontracts subject to Mass. General laws, Chapter 149, Sections 44A-J, shall comply with the filed sub-bid requirements of that statute. The Contractor shall be as fully responsible for the acts and omissions of his subcontractors, and of persons either directly or indirectly employed by them, as he is for the acts and omissions of persons directly employed by him. The Contractor shall cause appropriate provisions to be inserted in all subcontractors relative to the work to bind subcontractors to the Contractor by the Terms of the General Conditions and other contract documents insofar as applicable to the work of subcontractors and to give the Contractor the same power as regards terminating any subcontract that CONTRACTING DEPARTMENT (AS STATED ON THE FIRST PAGE OF THE AGREEMENT) may exercise over the Contractor under any provision of the contract documents. Nothing contained in this contract shall create any contractual relation between any subcontractor and CONTRACTING DEPARTMENT (AS STATED ON THE FIRST PAGE OF THE AGREEMENT).

6.2 Substitution of Subcontractors.

6.2.1 The **Contractor** shall not substitute another Subcontractor therefor without notice to the **City** and the **City's** prior written consent of such substitution.

6.3 Names of Subcontractors.

6.3.1 Upon execution of the Contract with the **City**, the **Contractor** shall provide in writing to the **City**, through the **Design Professional,** the names, addresses, telephone numbers, and fax numbers of all persons proposed for each principal portion of the Work.

6.4. Objections to Subcontractors.

6.4.1 The **Contractor** shall not use any Subcontractor against whom the **City** has a reasonable objection. The **Contractor** shall not be required to contract with any person or entity against whom it has a reasonable objection.

6.5. Form of the Subcontract.

6.5.1 All Work performed by a Subcontractor shall be through an appropriate subcontract. The form of subcontract shall be submitted to the **City for its** approval, which shall not be unreasonably withheld or delayed.

6.6. Content of the Subcontract.

6.6.1. In addition to all statutorily mandated provisions and provisions required elsewhere in the Contract Documents, each subcontract shall expressly provide that:

6.6.1.1. Each subcontract agreement for a portion of the Work is assigned by the **Contractor** to the **City** provided that:

6.6.1.1.1. the assignment is effective only after termination of the Contract by the **City** or the

Contractor and only for those subcontract agreements which the **City** accepts by notifying the Subcontractor in writing; and

6.6.1.1.2. the assignment is subject to the prior rights of the surety, if any, obligated under bond relating to the Contract.

6.6.1.2. Each Subcontractor is bound by the requirements of the Contract Documents for the express benefit of the **City.**

6.6.1.3. Each Subcontractor shall assume toward the **Contractor** all the obligations that the **Contractor** assumes toward the **City** and the **Design Professional**, unless otherwise provided by law.

ARTICLE 7
PERFORMANCE AND PAYMENT BONDS

7.1. Form of Bonds.

7.1.1 The performance and labor and material or payment bonds shall be in the form required by the **City**, copies of which are included in the Project Manual. The **City** reserves the right to reject any bond that does not conform to the **City's** requirements.

7.2. Furnished by the Contractor. (*Reference:* M.G.L. c. 30, §39M(c);, M.G.L. c. 149, §29).

7.2.1 The **Contractor** shall furnish a performance bond and a labor and materials or payment bond, each with a surety company qualified to do business under the laws of the Commonwealth and satisfactory to the **City** and each in the sum of the Contract Sum, the premiums for which are to be paid by the **Contractor** and are included in the Contract Sum. The bonds shall remain in effect until final payment is made. The sum of the performance bond shall increase each time the Contract Sum is increased as a result of a Change Order.

7.3. Submission to the City.

7.3.1 The **Contractor** must submit the performance and a labor and materials or payment bonds to the **City** upon the **Contractor's** execution of the Agreement.

ARTICLE 8
INSURANCE REQUIREMENTS

8.1 Insurance Certificates.

8.1.1 Prior to starting work on this project, the contractor shall deposit with the **City**, certificates from insurers clearly stating that the required insurance policies have been issued to the **Contractor** and will remain in effect during the time period required to complete this contract. ACCORD forms will not be accepted. The certificates must be in a form satisfactory to the **City**. The insurance shall include all major divisions of coverage, and shall be on a comprehensive general basis including: Premises and Operations (including X-C-U), Owners and Contractors Protective, Products and Completed Operations, Owned, Non-owned or Hired and/or Leased Motor Vehicles. Such insurance shall be written for not less than any limits of liability, required by law or the following limits, whichever are greater.

8.2 Minimum Coverages. The **Contractor** shall possess and maintain throughout the contract period/project, insurance in the kinds and amounts as stated in the Specification included in Appendix C of this Agreement. The **Contractor** may purchase and maintain excess liability insurance in the in the umbrella form in order to satisfy the limits of liability required for the insurance to be purchased and maintained in accordance with the required requirements set forth above (in addition to the umbrella limits required). Evidence of such excess liability shall be delivered to the **City** in the form of a certificate and the certificate indicating the policy numbers and limits of liability of all underlying insurance.

8.3 Additional Insured. The **City** shall be named as an additional insured on each certificate, and the certificate must have the endorsement of the insurance agency.

8.4 Notice. Each certificate shall contain a notation that the insurer will give 30 days notice to the **City** prior to cancellation, change or non-renewal of policy.

8.5 Carrier Rating. Insurance carriers MUST have an A.M. Best rating of "A" or better.

8.6 Material Breach. Failure of the contractor to provide and continue in force such insurance shall be deemed a material breech of contract and shall operate as immediate termination thereof.

ARTICLE 9
TESTS AND INSPECTIONS

9.1. Access.

9.1.1 The **City**, the **Design Professional**, and all other persons designated by the **City** shall have access to the Work at reasonable times for observing, inspecting, and testing. The **Contractor** shall provide them with proper and safe conditions for such access and advise them of the **Contractor's** site safety procedures and programs so that they may comply therewith as applicable.

9.2. Tests and Inspections.

9.2.1. The **Contractor** shall give the **Design Professional** timely notice of readiness of the Work for all required inspections, tests, or approvals and shall cooperate with inspection and testing personnel to facilitate required inspections or tests.

9.2.2. Unless otherwise provided, the **Contractor** shall make arrangements for such tests, inspections, and approvals with an independent testing laboratory or entity acceptable to the **City**, or with the appropriate public authority and shall bear all related costs of tests, inspections, and approvals. If the laws or regulations of any public body having jurisdiction require any Work or part thereof specifically to be inspected, tested, or approved by an employee or other representative of such public body, the **Contractor** shall assume full responsibility for arranging and obtaining such inspections, tests, or approvals, pay all costs in connection therewith and furnish the **Design Professional** with the required certificates of inspection, testing, or approval.

9.2.3. The **Contractor** shall be responsible for arranging and obtaining and shall pay all costs in connection with any inspections, tests, or approvals required for the **Design Professional's** acceptance of materials or equipment to be incorporated into the Work, or of materials, mix designs, or equipment submitted for approval prior to the **Contractor's** purchase thereof for incorporation into the Work.

9.2.4. If any Work that is to be inspected, tested, or approved is covered by the **Contractor**, Subcontractor, or Sub-subcontractor without the prior written consent of the **Design Professional**, it must be uncovered for observation, inspection, testing, or approval, if requested by the **Design Professional**. The **Contractor** must recover the Work at its own expense.

9.2.5. The **Contractor** shall not be relieved of obligations to perform the Work in accordance with the Contract Documents either by activities or duties of the **Design Professional** in the **Design Professional's** administration of the Contract or by tests, inspections, or approvals required or performed by persons other than the **Contractor**.

ARTICLE 10
UNCOVERING AND CORRECTING WORK

10.1. Uncovering Work.

10.1.1. If a portion of the Work is covered contrary to the **Design Professional's** request or to requirements specifically expressed in the Contract Documents, it must, if required in writing by the **Design Professional**, be uncovered for the **Design Professional's** observation and be replaced, both at the **Contractor's** expense and without change in the Contract Time.

10.1.2. If a portion of the Work has been covered which the **Design Professional** has not specifically requested to observe prior to its being covered, the **Design Professional** may request to see such Work, and it shall be uncovered by the **Contractor**. If it is found that such Work is in accordance with the Contract Documents, costs of uncovering and replacing shall, by appropriate Change Order, be charged to the **City**. If it is found that such Work is defective or not in accordance with the Contract Documents, the **Contractor** shall pay all claims, costs, losses, and damages caused by, arising out of or resulting from such uncovering, exposure, observation, inspection, and testing and of satisfactory replacement of reconstruction (including, but not limited to, all costs of repair or replacement of work of others); and the **City** shall be entitled to an appropriate decrease in the Contract Sum. The **City** may take such decrease by reducing the then current application for payment accordingly or subsequent applications, if necessary, until the decrease is paid in full.

10.2. Correcting Work.

10.2.1. The **Contractor** shall promptly correct Work rejected by the **Design Professional** or failing to conform to the requirements of the Contract Documents, whether observed before or after Substantial Completion and whether or not fabricated, installed, or completed. The **Contractor** shall bear all costs of correcting such rejected Work including additional testing and inspections and
compensation for the **Design Professional's** services and expenses made necessary thereby and any cost, loss, or damages to the **City** resulting from such failure or defect.

10.2.2. If, within one (1) year after the date of Substantial Completion of the Work or designated portion thereof, or after the date for commencement of warranties established in Article 15, or by terms of an applicable special warranty required by the Contract Documents, any of the Work is found to be not in accordance with the requirements of the Contract Documents, the Contractor shall correct it promptly after receipt of written notice from the **City** to do so, unless the **City** has previously given the **Contractor** a written acceptance of such condition. This period of one (1) year shall be extended with respect to portions of Work first performed after Substantial Completion by the period of time between Substantial Completion and the actual performance of the Work. This obligation to correct under this paragraph shall survive acceptance of the Work under the Contract and termination of the Contract. The **City** shall give such notice promptly after discovery of the condition.

10.2.3. The **Contractor** shall correct, remove, or replace portions of the Work that are not in accordance with the requirements of the Contract Documents and are neither corrected by the **Contractor** nor accepted by the **City**.

10.2.4. If the **Contractor** fails within a reasonable time to correct nonconforming Work, or to remove and replace rejected Work, or fails to perform the Work in accordance with the Contract Documents, the **City** may correct it in accordance with the provisions herein. If the **Contractor** does not proceed with correction, removal, or replacement of such nonconforming Work within seven (7) days from the date of written notice from the **Design Professional**, the **City** may correct it and store any salvageable materials or equipment at the **Contractor's** expense. If the **Contractor** does not pay costs of any such removal and storage within ten (10) days after written notice, the **City** may upon ten (10) additional days' written notice sell such materials and equipment at auction or at private sale and shall account for the proceeds thereof, after deducting costs and damages that should have been borne by the **Contractor**, including compensation for the **Design Professional's** services and expenses made necessary thereby. If such proceeds of sale do not cover all the costs that the **Contractor** should have born, the Contract Sum shall be reduced by the deficiency. If payments then or thereafter due the **Contractor** are not sufficient to cover such amount, the **Contractor** shall pay the difference to the **City**.

10.2.5. The **Contractor** shall bear the cost of correcting destroyed or damaged construction, whether completed or partially completed, of the **City** or separate contractors caused by the **Contractor's** correction or removal of Work which is not in accordance with the requirements of the Contract Documents.

10.2.6. Nothing contained in this paragraph shall be construed to establish a period of limitation with respect to other obligations that the **Contractor** might have under the Contract Documents. Establishment of the time period of one (1) year as described in the above paragraph related only to the specific obligation of the **Contractor** to correct the Work and has no relationship to the time within which the obligation to comply with the Contract Documents may be sought to be enforced nor to the time within which proceedings may be commenced to establish the **Contractor's** liability with respect to the **Contractor's** obligations other than specifically to correct the Work.

10.3. Acceptance of Nonconforming Work.

10.3.1 If, instead of requiring correction or removal and replacement of defective or nonconforming Work, the **City** prefers to accept Work which is not in accordance with the requirements of the Contract Documents, the **City** may do so instead of requiring its removal and correction, in which case the **Contractor** shall pay all claims, costs, losses, and damages attributable to the **City's** evaluation of and determination to accept such defective or non-conforming Work. The Contract Sum will be reduced as appropriate. Such adjustment shall be effected whether or not final payment has been made.

ARTICLE 11
CHANGES IN THE WORK

11.1. In General.

11.1.1. The Contract Sum constitutes the total compensation (subject to authorized adjustments) payable to the **Contractor** for performing the Work. All duties, responsibilities and obligations assigned to or undertaken by the **Contractor** shall be at the **Contractor's** expense without any change in the Contract Sum.

11.1.2. Without invalidating the Contract and without notice to any surety, the **City** may, at any time or from time to time, order additions to, deletions from, or revisions in the Work. Such additions, deletions, or revisions will be authorized by a Change Order, a Modification or a **Construction Change** Directive. Upon receipt of any such document, the **Contractor** shall promptly proceed with the Work involved that will be performed under the applicable conditions of the Contract Documents (except as otherwise specifically provided).

11.1.3. The **Contractor** shall not be entitled to an increase in the Contract Sum or an extension of the Contract Time with respect to any Work performed that is not required by the Contract Documents as amended, modified, or supplemented, except as otherwise provided herein.

11.2. Change Orders.

11.2.1. (*Reference:* M.G.L. c. 30, §39I;). The **Contractor** shall perform all the Work required by this Contract in conformity with the Plans and Specifications contained herein. No willful and substantial deviation from said Plans and Specifications shall be made unless authorized in writing by the **City** and the **Design Professional** in charge of the Work who is duly authorized by the **City** to approve such deviations. In order to avoid delays in the prosecution of the Work required by such Contract, such deviation from the Plans or Specifications may be authorized by a written order of the **City** or the **Design Professional** so authorized to approve such deviation. Within thirty (30) days thereafter, such written order shall be confirmed by a certificate of the **City,** using AIA Document G701 (or its equivalent), stating: (1) If such deviation involves any substitution or elimination of materials, fixtures or equipment, the reasons why such materials, fixtures, or equipment were included in the first instance and the reasons for substitution or elimination, and, if the deviation is of any other nature, the reasons for such deviation, giving justification therefor; (2) that the specified deviation does not materially injure the Project as a whole; (3) that either the work substituted for the Work specified is of the same cost and quality, or that an equitable adjustment has been agreed upon between the **City** and the **Contractor** and the amount in dollars of said adjustment; and (4) that the

deviation is in the best interest of the **City**. The Change Order shall also indicate whether or not the date of substantial completion has been extended. The equitable adjustment in price shall be determined by the unit prices, if any, in the General Contractor's bid; otherwise, it shall be a number which is agreed to by both parties as a fair adjustment and which can be itemized and substantiated to the reasonable satisfaction of the Contracting Authority. Where increases and decreases to the Contract Sum are included in one Change Order, the negotiated allowance for overhead and profit shall be calculated on the basis of the net increase, if any.

11.3. Construction Change Directive.

11.3.1. A **Construction Change** Directive shall be used in the absence of total agreement on the terms of a Change Order.

11.3.2. Upon request of the **City** or the **Design Professional**, the **Contractor** shall without cost to the **City** submit to the **Design Professional** in such form as the **Design Professional** may require, an accurate written estimate of the cost of any proposed extra work or change. The estimate shall indicate the quantity and unit cost of each item of materials, and the number of hours of work and hourly rate for each class of labor, as well as the description and amounts of all other costs chargeable under the terms of this Article. Unit labor costs for the installation of each item of materials shall be shown if required by the **Design Professional**. If required by the **Design Professional**, in order to establish the exact cost of new Work added or of previously required Work omitted, the **Contractor** shall obtain and furnish to the **Design Professional** bona fide proposals from recognized Suppliers for furnishing any material included in such Work. Such estimates shall be furnished promptly so as to occasion no delay in the Work, and shall be furnished at the **Contractor's** expense.

11.3.3. The **Contractor** shall state in the estimate any extension of time required for the completion of the Work if the change or extra Work is ordered. The **Contractor** shall document, through a critical path analysis, or some other clearly delineated explanation, how the proposed change affects other aspects of the Work, and why it would require an extension of time. The **Contractor** shall promptly revise and resubmit such estimate if the **Design Professional** determines that it is not in compliance with the requirements of this Article, or that it contains errors of fact or mathematical errors.

11.3.4. If the **Construction Change** Directive provides for an adjustment to the Contract Sum**,** the adjustment shall be based on one of the following methods, as selected by the **City**, selection of which does not require the consent of the **Contractor**:

11.3.4.1. by unit prices stated in the Contract Documents or otherwise mutually agreed upon; or

11.3.4.2. by Cost and Percentages estimated by the **Contractor** as provided herein and accepted by the **City**, whereupon the **Contractor's** estimate shall become a fixed price which shall not be changed by any variation in the actual cost of executing the Work covered by the change; or

11.3.4.3. by actual Cost determined after the Work covered by the change is completed, plus Percentage; or

11.3.4.4. by submission to arbitration or a court, which shall determine the fair value of the Work covered by the change.

11.3.5. "Cost" shall mean the estimated or actual net increase or decrease in cost to the **Contractor**, Subcontractor, or Sub-subcontractor for performing the Work covered by the change, including actual payments for materials, equipment rentals, expendable items, wages, and associated benefits to the workers and to supervisors employed full time at the Site, insurance, bonds, and other provable direct costs, but not including any administrative, accounting or expediting costs, or other indirect or overhead costs, or any wages or benefits of supervisory personnel not assigned full time to the Site, or any amount for profit or fee to the **Contractor**, Subcontractor, or Sub-subcontractor.

11.3.6. "Percentage" shall mean an allowance to be added to or subtracted from the Cost in lieu of overhead and profit and of any other expense that is not included in the Cost of the Work covered by the change, as defined above. Percentage for a Sub-subcontractor shall be 8% of any net increase or decrease of Cost of any Work performed by the Sub-subcontractor's own forces plus 4% of any net increase or decrease in Cost of any Work performed for the Sub-subcontractor by lower tier Sub-subcontractors. Percentage for a Subcontractor shall be 12% of any net increase or decrease of Cost of any Work performed by the Subcontractor's own forces plus 4% of the Cost of Work performed by Sub-subcontractors. Percentage for the **Contractor** shall be 15% of any net increase or decrease of Cost of any Work performed by the **Contractor's** own forces plus 5% of any net increase or decrease in the Cost for all other Work covered by the change. When the **Contractor** is also performing Work as a Subcontractor or Sub-subcontractor, the **Contractor** shall only be entitled to a total of no more than 15% of any net increase or decrease of Cost of any Work.

11.3.7. When in the reasonable judgment of the **Design Professional** a series of **Construction Change** Directives or Change Orders effect a single change, Percentage shall be calculated on the cumulative net increase or decrease in Cost, if any.

11.3.8. If unit prices are stated in the Contract Documents or are subsequently agreed upon, and if quantities originally contemplated are so changed in a Proposed Change Order or **Construction Change** Directive that the application of such unit prices to quantities of Work proposed will cause substantial inequity to the **City** or the **Contractor**, the applicable unit prices shall be equitably adjusted. Wherever the estimated quantities of work to be done and materials to be furnished under this

contract are shown in any of the documents including the proposal, they are given for use in comparing bids and the right is especially reserved herein otherwise specifically limited, to increase or diminish them as may be deemed reasonably necessary or desirable by CONTRACTING DEPARTMENT (AS STATED ON THE FIRST PAGE OF THE AGREEMENT) to complete the work contemplated by the contract, nor shall any such increases or diminution shall in no way violate this contract, nor shall any such increase or diminution give cause for claims or liability for damages.

11.3.9. If the **City** elects to determine the Cost of the Work as provided in method (11.3.4.1) using unit prices stated in the Contract Documents or subsequently agreed upon, the unit prices shall be subject to the prior paragraph. Notwithstanding the inclusion of unit prices in the Contract Documents, it shall be the **City's** option to require the Cost of any given change to be determined by one of the other methods stated in 11.3.4. If the **City** elected to determine the Cost of the change by unit prices and the nature of the work is such that its extent cannot readily be measured after the completion of such work or any subsequent Work, the **Contractor** shall keep daily records, available at all times to the **Design Professional** for inspection, of the actual quantities of such Work put in place, and delivery receipts or other adequate evidence, acceptable to the **Design Professional**, indicating the quantities of materials delivered to the Site for use in such unit price Work, and distinguishing such from other similar material delivered for use in Work include in the base Contract Sum. If so required by the **Design Professional**, materials for use in unit price Work shall be stored apart from all other materials on the Project.

11.3.10. If the **City** elects to determine the Cost of the Work as provided in methods 11.3.4.3. or 11.3.4.4. or if the method of determining the Cost has not been established before the Work is begun, the **Contractor** shall keep detailed daily records of labor and material costs applicable to the Work.

11.3.11. Upon receipt of a **Construction Change** Directive, the **Contractor** shall promptly proceed with the change in the Work involved and advise the **Design Professional** in writing of the **Contractor's** agreement or disagreement with the method, if any, provided in the **Construction Change** Directive for determining the proposed adjustment in the Contract Time.

11.3.12.A **Construction Change** Directive signed by the **Contractor** indicates the agreement of the **Contractor** therewith, including adjustment in the Contract Sum and Contract Time or the method for determining them. Such agreement shall be effective immediately and shall be recorded as a Change Order.

11.3.13. If the **Design Professional** and the **Contractor** do not agree with the adjustment in the Contract Time or the method for determining it, the adjustment or the method shall be referred to the **Design Professional** for determination.

11.4. Minor Changes in the Work.

11.4.1. The **Design Professional** has the authority to order minor changes in the Work. "Minor changes" as used in this paragraph mean changes which are so insignificant as to not affect the Contract Sum or the Contract Time and which are not inconsistent with the intent of the Contract Documents. Any minor change shall be committed to a written order which shall be binding on both the **City** and the **Contractor** and which shall be promptly carried out by the **Contractor**.

11.5. Certificate of Appropriations. (*Reference:* M.G.L. c. 44, §31C;). This Contract shall not be deemed to have been made until the **City's** auditor has certified thereon that an appropriation in the amount of this Contract is available therefor and that an officer or agent of the **City** has been authorized to execute said Contract and approve all requisitions and change orders. No order to the **Contractor** for a change in or addition to the Work, whether in the form of a drawing, plan, detail or any other written instruction, unless it is an order which the **Contractor** is willing to perform without any increase to the Contract price, shall be deemed to be given until the auditor has certified thereon that an appropriation in the amount of such order is available therefore; but such certificate shall not be construed as an admission by the **City** of its liability to pay for such work. The certificate of the auditor that an appropriation in the amount of this Contract or in the amount of such order is available shall bar any defense by the **City** on the grounds of insufficient appropriation.

ARTICLE 12
CHANGE IN THE CONTRACT TIME

12.1. Date of Commencement.

12.1.1 The date of commencement of the Work is the date established in the Notice to Proceed. The date shall not be postponed by the failure to act of the **Contractor** or persons or entities for whom the **Contractor** is responsible.

12.2. Progress and Completion.

12.2.1. Time is of the essence; all time limits stated in the Contract Documents are of the essence of the Contract. By executing the Agreement, the **Contractor** confirms that the Contract Time is a reasonable period for performing the Work.

12.2.2. The **Contractor** shall proceed expeditiously with adequate forces and shall achieve Substantial Completion within the Contract Time.

12.2.3. At least ten (10) working days after the Notice to Proceed or twenty (20) working days before the first application for payment, the **Contractor** shall submit to the **Design Professional** a progress schedule showing for each class of

Work included in the schedule of values, the percentage of completion to be obtained and the total dollar value of Work to be completed as of the first of each month until Substantial Completion. All calculations shall be on the basis of Work in place, but may include, at the **Design Professional's** discretion, the value of materials delivered but not in place.

12.2.4. The progress schedule shall be based on an orderly progression of the Work, allowing adequate time for each operation (including adequate time for submission and review of submittals), and leading to a reasonable certainty of Substantial Completion by the date established in the Agreement. The progress schedule will be reviewed by the **Design Professional** for compliance with the requirements of this Article and will be accepted by the **Design Professional** or returned to the **Contractor** for revision and resubmittal. Unless specifically required by law, no payment under this Contract shall be due until the progress schedule has been approved by the **Design Professional**. The **Design Professional's** review of the progress schedule shall not impose any duty on the **Design Professional** or the **City** with respect to the timing, planning, scheduling, or execution of the Work. In particular, if the **Contractor** proposes a progress schedule indicating a date of Substantial Completion which is earlier than the Contract Time, the **Contractor** shall not be entitled to additional payment or compensation of any kind if, for any reason, the full Contract Time is required to achieve Substantial Completion of the Work.

12.2.5. If in any Application for Payment, the total value of the completed Work in place, as certified by the **Design Professional**, is less than 90% of the total value of the Work in place estimated in the progress schedule, the **City** may, at the **City's** option, require the **Contractor** to accelerate the progress of the Work without cost to the **City** by increasing the workforce or hours or Work or by other reasonable means approved by the **Design Professional**.

12.2.6. If each of three successive applications, as certified by the **Design Professional**, indicate that the actual Work completed is less than 90% of the values estimated in the progress schedule to be completed by the respective dates, the **City** may at the **City's** option, treat the **Contractor's** delinquency as a default justifying the action permitted under Article 18.

12.2.7. If the **Design Professional** has determined that the **Contractor** should be permitted to extend the time for completion as provided below, the calendar dates in the progress schedule shall be adjusted accordingly to retain their same relationship to the adjusted date of Substantial Completion, and the dollar value of the Work to be completed as of the first of each month shall be adjusted pro rata.

12.2.8. If the **Contractor** fails to submit any application for payment in any month, the **Design Professional** shall, for the purpose of this evaluation of progress, certify separately to the actual value of the Work in place completed as of the first of the month to the best of the **Design Professional's** knowledge.

12.2.9. Nothing herein shall limit the **City's** right to liquidated or other damages for delays by the **Contractor** or to any other remedy which the **City** may be entitled or may possess under other provisions of the Contract Documents or by law.

12.3. Delays and Extensions of Time.

12.3.1. If the **Contractor** is delayed at any time in the progress of the Work by an act or neglect of the **City** or the **Design Professional**, or of an employee of either, or of a separate contractor employed by the **City**, or by changes ordered in the Work, or by labor disputes, fire, unusual delay in deliveries, unavoidable casualties, or other causes (except weather) beyond the **Contractor's** control, or by delay authorized by the **City**, or by other causes which the **Design Professional** determines may justify delay, then the Contract Time shall be extended by Change Order or **Construction Change** Directive for such reasonable time as the **Design Professional** may determine.

12.3.2. Claims relating to time shall be made in accordance with applicable provisions of Article 16.

12.3.3. No claim for extension of time shall be allowed on account of failure of the **Design Professional** to furnish Plans, Specifications or instructions or to return Shop Drawings or Samples until fifteen (15) days after receipt by the **Design Professional** by registered or certified mail of written demand for such instructions, Plans, Specifications, or Samples, and then not unless such claim is reasonable.

12.3.4. No extensions of time shall be granted because of seasonal or abnormal variations in temperature, humidity or precipitation, which conditions shall be wholly at the risk of the **Contractor**, whether occurring within the time originally scheduled for completion or within the period of any extension granted. There shall be no increase in the Contract Sum on account of any additional costs of operations or conditions resulting therefrom.

12.3.5. The **Contractor** hereby agrees that the **Contractor** shall have no claim for damages of any kind against the **City** or the **Design Professional** on account of any delay in the commencement of the Work and/or any hindrance, delay, or suspension of any portion of the Work, whether such delay is caused by the **City**, the **Design Professional**, or otherwise, except as and to the extent expressly provided under M.G.L. c. 30, §39O, in the case of written orders by the **City**. The **Contractor** acknowledges that the **Contractor's** sole remedy for any such delay and/or suspension will be an extension of time as provided in this Article.

12.3.6. (*Reference:* M.G.L. c. 30, §39O;). (a) The **City** may order the **Contractor** in writing to suspend, delay, or interrupt all or any part of the Work for such period of time as it may determine to be appropriate for the convenience of the **City**, provided however that if there is a suspension, delay, or interruption for fifteen (15) days or more due to a failure of the **City** to act within the time specified in this Contract, the **City** shall make an adjustment in the

Contract prices for any increase in the cost of performance of this Contract under this provision for any suspension, delay, interruption, or failure to act to the extent that such is due to any cause for which this Contract provides for an equitable adjustment of the Contract price under any other Contract provisions.

(b) The **Contractor** must submit the amount of a claim under provision (a) to the **City** in writing as soon as practicable after the end of the suspension, delay, interruption, or failure to act and, in any event, not later than the date of final payment under this Contract and, except for costs due to a suspension order, the **City** shall not approve any costs in the claim incurred more than twenty (20) days before the **Contractor** notified the **City** in writing of the act or a failure to act involved in the Claim.

In the event a suspension, delay, interruption, or failure to act of the **City** increases the cost of performance to any Subcontractor, that Subcontractor shall have the same rights against the **Contractor** for payment for an increase in the cost of its performance as provisions (a) and (b) give the **Contractor** against the **City**, but nothing in provisions (a) and (b) shall in any way change, modify, or alter any other rights which the **Contractor** or the Subcontractor may have against each other.

12.4. Liquidated Damages.

12.4.1. If the **Contractor** shall fail to achieve Substantial Completion within the Contract Time, it shall be liable to pay the **City** the daily amount specified in the Agreement, not as a penalty, but as a fixed and agreed upon damages for breach of contract. The said amount is fixed and agreed upon because of the difficulty of ascertaining the **City's** actual damages. It is mutually understood that the said amount is a reasonable approximation or estimate thereof as of the date of the Agreement. The **City** may elect to withhold said amount from periodic or final payments due to the **Contractor**, in addition to retainage and other back charges.

12.5. Changes in the Contract Time.

12.5.1. In Writing. The Contract Time may only be changed by a Change Order or a Modification. Any claim for an adjustment of the Contract Time shall be based on a written notice delivered to the party making the claim to the other party and to the **Design Professional** promptly (but in no event later that seven (7) days) after the occurrence of the event giving rise to the claim and stating the general nature of the claim. Notice of the extent of the claim with supporting data shall be delivered within thirty (30) days after such occurrence and shall be accompanied by the claimant's written statement that the adjustment claimed is the entire adjustment to which the claimant has reason to believe it is entitled as a result of the occurrence of said event. All claims for adjustment in the Contract Time shall be determined by the **Design Professional** in accordance with Article 16. No claim for an adjustment in the Contract Time will be valid if not submitted in accordance with the requirements of this paragraph.

12.5.2. Early Completion. The Contract Time shall not be changed due to a delay in the **Contractor's** early completion date.

ARTICLE 13
PAYMENTS

13.1. Schedule of Values.

13.1.1. The **Contractor** shall submit to the **Design Professional** a schedule of values which shall subdivide the Work into its component parts and shall include quantities, direct craft labor worker hours, labor cost and material/equipment cost. Labor cost shall include an appropriate amount of construction equipment costs, supplemental costs, administrative expenses, contingencies, and profit. The **Contractor** shall prepare the schedule of values in such form and supported by such data to substantiate its accuracy as the **Design Professional** may require and shall be revised if later found by the **Design Professional** to be inaccurate. This schedule, unless objected to by the **Design Professional**, shall be used as a basis for reviewing the **Contractor's** applications for payment.

13.2. Content and Submission of Applications for Payment.

13.2.1. At least ten (10) days before the date established for each progress payment, the **Contractor** shall submit to the **Design Professional** six (6) copies of an itemized application for payment for Work completed in accordance with the schedule of values. Such application shall be in a form or format established or approved by the **Design Professional** and shall be supported by documentation substantiating the **Contractor's** right to payment.

13.2.2. When **Construction Change** Directives have set forth an adjustment to the Contract Sum but have not yet been included in Change Orders, the value established by the **City** may be included in the application.

13.2.3. Applications covering Work of Subcontractors or Suppliers shall not include requests for payments of amounts the **Contractor** does not intend to pay to a Subcontractor or Supplier because of a dispute or other reason. The **Contractor** shall not be paid for any Work performed by a Subcontractor unless and until the **City** receives for that Subcontractor a certificate of insurance that conforms to the requirements of the Contract Documents .

13.2.4. Unless otherwise provided in the Contract Documents, payments shall be made on account of materials and

equipment delivered and suitably stored at the Site for subsequent incorporation in the Work. If approved in advance by the **City**, payment may similarly be made for materials and equipment suitably stored off the Site at a location agreed upon in writing. Payment for materials and equipment stored on or off the Site shall be conditioned upon the application for payment being accompanied by a bill of sale, an invoice, or other documentation warranting that the **City** has received the materials and equipment free and clear of all liens, claims, security interests, or encumbrances, hereinafter collectively referred to as "liens," and evidence that the materials and equipment are covered by appropriate insurance and other arrangements to protect the **City's** interest therein.

13.2.5. Each application for payment or periodic estimate requesting payment shall be accompanied by, at the **City's** option, a certificate from each Subcontractor stating that the Subcontractor has been paid all amounts due the Subcontractor on the basis of the previous periodic payment to the **Contractor**, or else stating the amount not so paid and the reason for the discrepancy. In the event of any such discrepancy, the **Contractor** shall furnish the **Contractor's** own written explanation to the **City** through the **Design Professional**. Such waiver or certificate shall be in a form acceptable to the **City**.

13.3. False Applications for Payment.

13.3.1. (*Reference:* M.G.L. c. 266, §§67B). Any person who makes or presents to any claim upon or against any employee or department of the **City**, knowing such claim to be false, fictitious, or fraudulent shall be punished by a fine or not ore than ten thousand dollars ($10,000) or by imprisonment in the state prison for not more than five (5) years, or in the house of correction for not more than two and one-half years, or both.

13.4. Review of Applications for Payment.

13.4.1. The **Design Professional** shall review each application for payment and will reject any application that (1) is not accompanied by the required documentation or (2) contains errors, mathematical or otherwise.

13.4.2. Within five (5) business days after receipt of an application for payment, the **Design Professional** will either (1) return the application to the **Contractor** with a written explanation as to why it was rejected or (2) issue to the **City** a certificate for payment, with a copy to the **Contractor**, for such amount as the **Design Professional** determines is properly due. In the event an application is returned to the **Contractor**, the date of receipt of the application shall be the date of receipt of the corrected application.

13.4.3. The **Design Professional** or the **City** may make changes to any application submitted by the **Contractor**.

13.4.4. By recommending any payment, the **Design Professional** will not thereby be deemed to have represented that: (1) exhaustive or continuous on-site inspections have been made to check the quality or the quantity of the Work beyond the responsibilities specifically assigned to the **Design Professional** in the Contract Documents or (2) that there may not be other matters or issues between the parties that might entitle the **Contractor** to be paid additionally by the **City** or entitle the **City** to withhold payment to the **Contractor**. The **Design Professional's** approval of the application for payment and the accompanying documentation shall indicate that to the best of the **Design Professional's** knowledge, information, and belief, the Work has progressed to the point indicated by the **Contractor**, and that the quality of the Work is in accordance with the Contract Documents, subject to an evaluation of the Work as a functioning whole prior to or upon Substantial Completion, the results of any subsequent tests specified in the Contract Documents, final determination of quantities and classifications for unit price work and any other qualifications so stated.

13.4.5. The **Design Professional's** recommendation of any payment shall not mean that the **Design Professional** is responsible for the **Contractor's** means, methods, techniques, sequences, or procedures of construction, or the safety precautions and programs incident thereto, or for any failure of the **Contractor** to comply with laws and regulations applicable to the furnishing or performance of Work, of for any failure of the **Contractor** to perform or furnish Work in accordance with the Contract Documents.

13.4.6. No certificate given or payment made shall be evidence of the performance of this Contract, either wholly or in part and no payment, whether made upon the final certificate or otherwise, shall be construed as an acceptance of defective work or materials.

13.5. Decisions to Withhold Certification.

13.5.1. The **Design Professional** may refuse to recommend the whole or any part of any payment if, in the **Design Professional's** opinion, it would be incorrect to make the representations to the **City** referred to above.

13.5.2. If the **Contractor** and the **Design Professional** cannot agree on a revised amount, the **Design Professional** will promptly approve a certificate for payment for the amount for which the **Design Professional** is able to make such representations to the **City**. The **Design Professional** may also decide not to certify payment or, because of subsequently discovered evidence or subsequent observations, may nullify the whole or a part of a certificate for payment previously issued, to such extent as may be necessary in the **Design Professional's** opinion to protect the **City** from loss because of:

13.5.2.1. defective Work not remedied;

13.5.2.2. third party claims filed or reasonable evidence indicating probable filing of such claims;

13.5.2.3. failure of the **Contractor** to make payments properly to Subcontractors or for labor, materials or equipment;

13.5.2.4. reasonable evidence that the Work cannot be completed for the unpaid balance of the Contract Sum;

13.5.2.5. damage to the **City** or another contractor;

13.5.2.6. reasonable evidence that the Work will not be completed within the Contract Time, and that retainage currently held by the **City** would not be adequate to cover actual or liquidated damage for the anticipated delay;

13.5.2.7. persistent failure to carry out the Work in accordance with the Contract Documents; or

13.5.2.8. failure of mechanical trade or electrical trade subcontractors to comply with mandatory requirements for maintaining record drawings. The **Contractor** shall check record drawings each month. Written confirmation that the record drawings are current will be required by the **Design Professional** before approval of the **Contractor's** monthly payment requisition.

13.5.3. When the above reasons for withholding certification are removed, certification will be made for amounts previously withheld.

13.6. Progress Payments.

13.6.1. After the **Design Professional** has issued a certificate for payment, the **City** shall make payment in the manner and within the time provided in the Contract Documents.

13.6.2. (*Reference:* M.G.L. c. 30, §39G, 39K;). In the case of Contracts for the construction, reconstruction, alteration, remodeling, repair or demolition of any public building when the amount is more than two thousand dollars, the following paragraph applies: Within fifteen days (30 days in the case of the commonwealth, including local housing authorities) after receipt from the contractor, at the place designated by the awarding authority if such a place is so designated, of a periodic estimate requesting payment of the amount due for the preceding month, the awarding authority will make a periodic payment to the contractor for the work performed during the preceding month and for the materials not incorporated in the work but delivered and suitably stored at the site (or at some location agreed upon in writing) to which the contractor has title or to which a subcontractor has title and has authorized the contractor to transfer title to the awarding authority, upon certification by the contractor that he is the lawful owner and that the materials are free from all encumbrances, but less (1) a retention based on its estimate of the fair value of its claims against the contractor and less (2) a retention for direct payments to subcontractors based on demands for same in accordance with the provisions of section thirty-nine F, and less (3) a retention not exceeding five per cent of the approved amount of the periodic payment. After the receipt of a periodic estimate requesting final payment and within sixty-five days after (a) the contractor fully completes the work or substantially completes the work so that the value of the work remaining to be done is, in the estimate of the awarding authority, less than one per cent of the original contract price, or (b) the contractor substantially completes the work and the awarding authority takes possession for occupancy, whichever occurs first, the awarding authority shall pay the contractor the entire balance due on the contract less (1) a retention based on its estimate of the fair value of its claims against the contractor and of the cost of completing the incomplete and unsatisfactory items of work and less (2) a retention for direct payments to subcontractors based on demands for same in accordance with the provisions of section thirty-nine F, or based on the record of payments by the contractor to the subcontractors under this contract if such record of payment indicates that the contractor has not paid subcontractors as provided in section thirty-nine F. If the awarding authority fails to make payment as herein provided, there shall be added to each such payment daily interest at the rate of three percentage points above the rediscount rate than charged by the Federal Reserve Bank of Boston commencing on the first day after said payment is due and continuing until the payment is delivered or mailed to the contractor; provided, that no interest shall be due, in any event, on the amount due on a periodic estimate for final payment until fifteen days (twenty-four days in the case of the commonwealth) after receipt of such a periodic estimate from the contractor, at the place designated by the awarding authority if such a place is so designated. The contractor agrees to pay to each subcontractor a portion of any such interest paid in accordance with the amount due each subcontractor.

For all other construction contracts, progress payments are governed by chapter 30, §39G, and as follows: The **City** shall pay the amount due pursuant to any periodic, Substantial Completion or final estimate within thirty-five (35) days after receipt of written acceptance for such estimate from the **Contractor**. In the case of periodic payments, the **City** may deduct from its payment a retention based on its estimate of the fair value of its claims against the **Contractor**, a retention for direct payments to Subcontractors based on demands for same in accordance with M.G.L. c. 30, §39F; and a retention to secure satisfactory performance of the contractual work, not exceeding five percent (5%) of the approved amount of any periodic payment, and the same right to retention shall apply to bonded Subcontractors entitled to direct payment under M.G.L. c. 30, §39F; provided, that a five percent (5%) value of all items that are planted in the ground shall be deducted from the periodic payments until final acceptance.

Retainage prior to Substantial Completion. In all construction contracts, the City may hold back a retainage of up to five percent of each progress payment to ensure satisfactory completion of the work. In addition, the City may withhold any amounts in dispute, including disputed change orders and direct payments owed to subcontractors pursuant to Chapter 30, §39F of the General Laws.

Payment upon Substantial Completion. In the case of contracts for construction, reconstruction, alteration, repair, remodeling, or demolition of a public building, where the amount is more than $2,000, Chapter 30, Section 39K, of the General Laws governs payment upon substantial completion. For all other contracts, Chapter 30, Section 39F of the General Laws governs payment upon substantial completion.

13.6.3. No periodic, Substantial Completion or final estimate or acceptance or payment thereof shall bar the **Contractor** from reserving all rights to dispute the quantity and amount of, or the failure of the **City** to approve a quantity and amount of, all or part of any Work item or extra Work item.

13.7. Final Payment.

13.7.1. After final inspection and after the **Contractor** has completed all the required corrections to the satisfaction of the **Design Professional** and the **City** and delivered in accordance with the Contract Documents all maintenance and operating instructions, schedules, guarantees, bonds, certificates, or other evidence of insurance, certificates of inspection, marked-up record documents, and all other documents called for in the Contract Documents, as well as any surplus materials requested by the **City,** the **Contractor** may make an application for final payment as provided below.

13.7.2. (*Reference:* M.G.L. c. 30, §39G;). Within thirty (30) days after receipt by the **City** of a notice from the **Contractor** stating that all of the Work required by the Contract has been completed, the **City** shall prepare and forthwith send to the **Contractor** for acceptance a final estimate for the quantity and price of the Work done and all retainage on the Work less all payments made to date, unless the **City's** inspection shows that Work required by the Contract remains incomplete or unsatisfactory, or that documentation required by the Contract has not been completed.

13.7.3. The making and acceptance of final payment will constitute a waiver of all claims by the **Contractor** against the **City** other than those previously made in writing and still unsettled.

13.7.4. Interest. If the City fails to pay the Contractor within the time periods mandated by statute, the City shall pay interest to the Contractor in accordance with Chapter 30, Sections 39G and 39K, whichever is applicable.

13.8. Payments to Subcontractors.

13.8.1. Neither the **City** nor the **Design Professional** shall have an obligation to pay or see to the payment of money to a Subcontractor, Sub-subcontractor, or Supplier except as may otherwise be required by law.

13.8.2. (*Reference:* M.G.L. c. 30, §39F;) (1) Every contract awarded pursuant to sections forty-four A to L, inclusive, of chapter one hundred and forty-nine shall contain the following subparagraphs (a) through (i) and every contract awarded pursuant to section thirty-nine M of chapter thirty shall contain the following subparagraphs (a) through (h) and in each case those subparagraphs shall be binding between the general contractor and each subcontractor.

(a) Forthwith after the **Contractor** receives payment on account of a periodic estimate, the **Contractor** shall pay to each Subcontractor the amount paid for the labor performed and the materials furnished by that Subcontractor, less any amount specified in any court proceedings barring such payment and also less any amount claimed due from the Subcontractor by the **Contractor**.

(b) Not later than the sixty-fifth day after each Subcontractor substantially completes its Work in accordance with the Plans and Specifications, the entire balance due under the subcontract, less amounts retained by the **City** as the estimated cost of completing the incomplete and unsatisfactory items of Work, shall be due the Subcontractor; and the **City** shall pay that amount to the **Contractor**. The **Contractor** shall forthwith pay to the Subcontractor the full amount received from the **City** less any amount specified in any court proceeding barring such payment and also less any amount claimed due from the Subcontractor by the **Contractor**.

(c) Each payment made by the **City** to the **Contractor** pursuant to paragraphs (a) and (b) of M.G.L. c. 30, §39F(1);, for the labor performed and the materials furnished by a Subcontractor shall be made to the **Contractor** for the account of that Subcontractor; and the **City** shall take reasonable steps to compel the **Contractor** to make each such payment to each such Subcontractor. If the **City** has received a demand for direct payment from a Subcontractor for any amount which has already been included in a payment to the **Contractor** or which is to be include in a payment to the **Contractor** for payment to the Subcontractor as provided in paragraphs (a) and (b) of M.G.L. c. 30, §39F(1), the **City** shall act upon the demand as provided in M.G.L. c. 30, §39F.

(d) If, within seventy (70) days after the Subcontractor has substantially completed the subcontract Work, the Subcontractor has not received from the **Contractor** the balance due under the subcontract including any amount due for extra labor and materials furnished to the **Contractor**, less any amount retained by the **City** as the estimated cost of completing the incomplete and unsatisfactory items of Work, the Subcontractor may demand direct payment of that

balance from the **City**. The demand shall be by a sworn statement delivered to or sent by certified mail to the **City**, and a copy shall be delivered to or sent by certified mail to the **Contractor** at the same time. The demand shall contain a detailed breakdown of the balance due under the subcontract and also a statement of the status of completion of the subcontract Work. [The demand letter shall indicate the certified mail number assigned by the postal service or the date of delivery to the **Contractor**.] Any demand made after substantial completion of the subcontract Work shall be valid even if delivered or mailed prior to the seventieth day after the Subcontractor has substantially completed the subcontract Work. Within ten (10) days after the Subcontractor has delivered or so mailed the demand to the **City** and delivered or so mailed a copy to the **Contractor**, the **Contractor** may reply to the demand. The reply shall be by a sworn statement delivered to or sent by certified mail to the **City**, and a copy shall be delivered to or sent by certified mail to the Subcontractor at the same time. The reply shall contain a detailed breakdown of the balance due under the subcontract, including any amount due for extra labor and materials furnished to the **Contractor** and of the amount due for each claim made by the **Contractor** against the Subcontractor.

(e) Within fifteen (15) days after receipt of the demand by the **City**, but in no event prior to the seventieth day after substantial completion of the subcontract Work, the **City** shall make direct payment to the Subcontractor of the balance due under the subcontract, including any amount due for extra labor and materials furnished to the **Contractor**, less any amount (i) retained by the **City** as the estimated cost of completing the incomplete or unsatisfactory items of Work, (ii) specified in any court proceedings barring such payment, or (iii) disputed by the **Contractor** in the sworn reply; provided that the **City** shall not deduct from a direct payment any amount as provided in part (iii) if the reply is not sworn to or for which the sworn reply does not contain the detailed breakdown required by the previous paragraph. The **City** shall make further direct payments to the Subcontractor forthwith after the removal of the basis for deductions from direct payments made as provided in parts (i) and (ii) of this paragraph.

(f) The **City** shall forthwith deposit the amount deducted from a direct payment as provided in part (iii) of the previous paragraph in an interest-bearing joint account in the names of the **Contractor** and the Subcontractor in a bank in Massachusetts selected by the **City** or agreed upon by the **Contractor** and the Subcontractor and shall notify the **Contractor** and the Subcontractor of the date of the deposit and the bank receiving the deposit. The bank shall pay the amount in the account, including accrued interest, as provided in an agreement between the **Contractor** and the Subcontractor or as determined by decree of a court of competent jurisdiction.

(g) All direct payments and all deductions from demands for direct payments deposited in an interest-bearing account or accounts in a bank pursuant to the previous paragraph shall be made out of amounts payable to the **Contractor** at the time of receipt of a demand for direct payment from a Subcontractor and out of amounts which later become payable to the **Contractor** and in the order of receipt of such demands from Subcontractors. All direct payments shall discharge the obligation of the **City** to the **Contractor** to the extent of such payment.

(h) The **City** shall deduct from payments to a **Contractor** amounts that, together with the deposits in interest-bearing accounts pursuant to paragraph (f), are sufficient to satisfy all unpaid balances of demands for direct payment received from Subcontractors. All such amounts shall be earmarked for such direct payments, and the Subcontractors shall have a right in such deductions prior to any claims against such amounts by creditors of the **Contractor**.

(i) If the Subcontractor does not receive payment as provided in paragraph (a) or if the **Contractor** does not submit a periodic estimate for the value of the labor or materials performed or furnished by the Subcontractor and the Subcontractor does not receive payment for same when due less the deductions provided for in paragraph (a), the Subcontractor may demand direct payment by following the procedure in paragraph (d) and the **Contractor** may file a sworn reply as provided in that same paragraph. A demand made after the first day of the month following that for which the Subcontractor performed or furnished the labor and materials for which the Subcontractor seeks payment shall be valid even if delivered or mailed prior to the time payment was due on a periodic estimate from the **Contractor**. Thereafter the **City** shall proceed as provided in paragraphs (e), (f), (g), and (h). "Subcontractor" as used in this paragraph (1)(i) shall mean a person approved by the **City** in writing as a person performing labor or both performing labor and furnishing materials pursuant to a contract with the **Contractor**.

(2) Any assignment by a Subcontractor of the rights under this section to a surety company furnishing a bond under the provisions of M.G.L. c. 149, §29; shall be invalid. The assignment and subrogation rights of the surety to amounts included in a demand for direct payment which are in the possession of the **City** or which are on deposit pursuant to paragraph (g) shall be subordinate to the rights of all Subcontractors who are entitled to be paid under this section and who have not been paid in full.

(3) A **Contractor** or a Subcontractor shall enforce a claim to any portion of the amount of a demand for direct payment deposited as provided in herein by a petition in equity in the superior court against the other and the bank shall not be a necessary party. A Subcontractor shall enforce a claim for direct payment or a right to require a deposit as provided in paragraph (f) by a petition in equity in the superior court against the **City** and the **Contractor** shall not be a

necessary party. Upon motion of any party the court shall advance for speedy trial any petition filed as provided in this paragraph. M.G.L. c. 231, §§59 and 59B shall apply to such petitions. The court shall enter an interlocutory decree upon which execution shall issue for any part of a claim found due pursuant to §§59 and 59B and, upon motion of any party, shall advance for speedy trial the petition to collect the remainder of the claim. Any party aggrieved by such interlocutory decree shall have the right to appeal therefrom as from a final decree. The court shall not consolidate for trial the petition of any Subcontractor with the petition of one or more Subcontractors or the same general contract unless the court finds that a substantial portion of the evidence of the same events during the course of construction (other that the fact that the claims sought to be consolidated arise under the same general contract) is applicable to the petitions sought to be consolidated and that such consolidation will present unnecessary duplication of evidence. A decree in any such proceeding shall not include interest on the disputed amount deposited in excess of the interest earned for the period of any such deposit. No person except a Subcontractor filing a demand for direct payment for which no funds due the **Contractor** are available for direct payment shall have a right to file a petition in court of equity against the **City** claiming a demand for direct payment is premature, and such Subcontractor must file the petition before the **City** has made a direct payment to the Subcontractor and has made a deposit of the disputed portion as provided in part (iii) of paragraph (e) and in paragraph (f).

(4) In any petition to collect any claim for which a Subcontractor has filed a demand for direct payment the court shall, upon motion of the **Contractor**, reduce by the amount of any deposit of a disputed amount by the **City** as provided in part (iii) of paragraph (e) and in paragraph (f) any amount held under a trustee writ or pursuant to a restraining order or injunction.

ARTICLE 14
SUBSTANTIAL COMPLETION

14.1. Substantial Completion.

14.1.1. Upon Substantial Completion of the Work, the **Contractor** shall present in writing to the **City** its certification that the Work has been substantially completed and include in its certification (1) a list of items to be completed or corrected, (2) all special warranties required by the Contract Documents, endorsed by the **Contractor** and in a form reasonably acceptable to the **Design Professional** and (3) the permits and certificates referred to in 13.7.1., or elsewhere. The failure to include any item on the list mentioned in the preceding sentence does not alter the responsibility of the **Contractor** to complete all Work in accordance with the Contract Documents. When the **Design Professional** on the basis of an inspection determines that the Work or designed portion thereof is substantially complete and the other conditions have been met, the **Design Professional** will then prepare a certificate of Substantial Completion which shall establish the date of Substantial Completion, shall state the responsibilities of the **City** and the **Contractor** for security, maintenance, heat, utilities, damage to the Work, and insurance, and shall fix the time within which the **Contractor** shall complete the items listed therein. The certificate of Substantial Completion shall be submitted to the **City** and the **Contractor** for their written acceptance of the responsibilities assigned to them in such certificate.

14.1.2. Within twenty-one (21) days after receipt of the certification from the **Contractor**, the **City** shall present to the **Contractor** either a written declaration that the Work has been substantially completed or an itemized list of incomplete or unsatisfactory work items required by the Contract sufficient to demonstrate that the Work has not been substantially completed. The **City** may include with such list a notice setting forth a reasonable time within which the **Contractor** must achieve Substantial Completion of the Work. If the **City** fails to respond, by presentation of a written declaration or itemized list as aforesaid, to the **Contractor's** certification within the twenty-one (21) day period, the **Contractor's** certification shall take effect as the **City's** declaration that the Work has been substantially completed.

14.2. Partial Use or Occupancy of the Premises.

14.2.1. The **City** may occupy or use any completed or partially completed portion of the Work at any stage. Such partial occupancy or use may begin whether or not the portion is substantially complete, provided that the respective responsibilities of the **City** and the **Contractor** with respect to payments, retainage, if any, security, maintenance, heat, utilities, damage to the Work, insurance, correction of the Work, and warranties shall be established by agreement of the **City** and the **Contractor** or, absent such agreement, shall be determined by the **Design Professional** subject to the right of either party to contest such determination as provided in Article 16.

14.2.2. Immediately prior to such partial occupancy or use, the **City**, the **Contractor** and the **Design Professional** shall jointly inspect the area to be occupied or portion of the Work to be used in order to determine and record the condition of the Work.

14.2.3. Unless otherwise agreed upon, partial occupancy or use of a portion or portions of the Work shall not constitute acceptance of Work not complying with the requirements of the Contract Documents.

14.2.4. (*Reference:* M.G.L. c. 30, §39G;). Within sixty-five (65) days after the effective date of a declaration of

Substantial Completion, the **City** shall prepare and send to the **Contractor** for acceptance a Substantial Completion estimate for the quantity and price of the Work done and all but one percent (1%) retainage on that Work, including the quantity, price and all but one percent (1%) retainage for the undisputed part of each item and extra work item in dispute, but excluding the disputed part thereof, less the estimated cost of completing all incomplete and unsatisfactory items and less the total periodic payments made to date for the Work. The **City** shall also deduct from the Substantial Completion estimate an amount equal to the sum of all demands for direct payment filed by Subcontractors and not yet paid to Subcontractors or deposited in joint accounts pursuant to M.G.L. c. 30, §39F.

14.2.5. (*Reference:* M.G.L. c. 30, §39G). If the **City** fails to prepare and send to the **Contractor** any Substantial Completion estimate required by the provisions herein on or before the date specified, the **City** shall pay to the **Contractor** interest on the amount which would have been due to the **Contractor** pursuant to such Substantial Completion estimate at the rate of three (3) percentage points above the rediscount rate then charged by the Federal Reserve Bank of Boston from such date to the date on which the **City** sends that Substantial Completion estimate to the **Contractor** for acceptance or to the date of payment therefor, whichever occurs first. The **City** shall include the amount of such interest in the Substantial Completion estimate.

14.2.6. (*Reference:* M.G.L. c. 30, §39G). Within fifteen (15) days after the effective date of the declaration of Substantial Completion, the **City** shall send to the **Contractor** by certified mail, return receipt requested, a complete list of all incomplete or unsatisfactory items, and unless delayed by causes beyond its control, the **Contractor** shall complete all such items within forty-five (45) days after the receipt of such list or before the date for final payment and acceptance, whichever is later. If the **Contractor** fails to complete such Work within such time, the **City** may, subsequent to seven (7) days' written notice to the **Contractor** by certified mail, return receipt requested, terminate the Contract and complete the incomplete or unsatisfactory items and charge the cost of same to the **Contractor**.

14.3. Final Inspection.

14.3.1. Upon written notice from the **Contractor** that the entire Work or an agreed portion thereof is complete, the **Design Professional** will make a final inspection with the **City** and the **Contractor** and will notify the **Contractor** in writing of all particulars which this inspection reveals that the Work is incomplete or defective. The **Contractor** shall immediately take such measures as are necessary to complete such Work or remedy such deficiencies.

ARTICLE 15
GUARANTEES AND WARRANTIES

15.1. In General.

15.1.1. All guarantees and warranties specifically called for by the Specifications shall expressly run to the benefit of the **City**. Neither the final certificate of payment nor any provision in the Contract Documents, nor partial or entire occupancy of the premises by the City shall constitute any acceptance of work not done in accordance with the Contract Documents or relieve the Contractor of liability in respect to any express warranties or responsibility for faulty materials or workmanship. The Contractor shall remedy any defects in the work and pay for any damage to other work resulting therefrom, which shall appear within a period of one year from the date of final acceptance of the work unless a longer period is specified. CONTRACTING DEPARTMENT (AS STATED ON THE FIRST PAGE OF THE AGREEMENT) will give notice of observed defects with reasonable promptness.

15.2. Warranties.

15.2.1. Warranties required by the Contract Documents shall commence on the date of Substantial Completion of the Work or designated portion thereof, unless otherwise provided in the certificate of Substantial Completion.

15.2.2. The **Contractor** warrants that the materials and equipment furnished under the Contract will be new and of recent manufacture unless otherwise specified, and that all Work will be of good quality, free from faults and defects, and in conformance with the Contract Documents. Work not conforming to these requirements, including substitutions not properly approved and authorized, may be considered defective. The **Contractor's** warranty excludes remedy for damage or defect caused by abuse, Modifications not executed by the **Contractor**, improper or insufficient maintenance, improper operation, or normal wear and tear under normal usage. If required by the **Design Professional**, the **Contractor** shall furnish satisfactory evidence as to the kind and quality of material and equipment.

15.2.3. The **Contractor** warrants that title to all Work covered by an application for payment will pass to the **City** either by incorporation in the construction or upon the receipt of payment by the **Contractor**, whichever occurs first, free and clear of all liens. The **Contractor** further agrees that the submission of any application for payment shall conclusively be deemed to waive all liens with respect to said Work to which the **Contractor** may then be entitled, provided that such waiver of the lien rights shall not waive the **Contractor's** right to payment for such Work.

15.2.4. The **Contractor** warrants and guarantees that title to all Work, materials, and equipment covered by any

application for payment, whether incorporated in the Project or not, will pass to the **City** no later than the time of payment free and clear of all liens.

15.2.5. No materials or supplies for the Work shall be purchased by the **Contractor** or Subcontractor subject to any chattel mortgage or under a conditional sale contract or other agreement by which an interest is retained by the seller. The **Contractor** warrants that it has good title to all materials and supplies used by it in the Work, free from all liens.

15.2.6. The **Contractor** shall indemnify and hold the **City** harmless from all claims growing out of the lawful demands of Subcontractors, laborers, workers, mechanics, material persons, and furnishers of machinery and parts thereof, equipment, power tools, and all supplies, including commissary, incurred in the furtherance of the performance of this Contract. The **Contractor** shall at the **City's** request, furnish satisfactory evidence that all obligations of the nature hereinabove designated have been paid, discharged, or waived. If the **Contractor** fails to do so, then the **City** may, after having served written notice on the **Contractor** either pay unpaid bills, of which the **City** has written notice, direct, or withhold from the **Contractor's** unpaid compensation a sum of money deemed reasonably sufficient to pay any and all such lawful claims until satisfactory evidence is furnished that all liabilities have been fully discharged whereupon payment to the **Contractor** shall be resumed, in accordance with the terms of this Contract, but in no event shall the provisions of this sentence be construed to impose any obligations on the **City** to either the **Contractor** or its surety. In paying any unpaid bills of the **Contractor**, the **City** shall be deemed the agent of the **Contractor** and any payment so made by the **City** shall be considered as payment made under the Contract by the **City** to the **Contractor** and the **City** shall not be liable to the **Contractor** for any such payment made in good faith.

15.3. Extended Warranties and Guarantees.

15.3.1. Any defective Work that is either corrected or replaced will be warranted and guaranteed for a period of three (3) years from the date of such correction or replacement.

ARTICLE 16
CLAIMS

16.1. In General.

16.1.1. Written Notice. A Claim must be made by written notice to the other party.

16.1.2. Content of Notice. The notice must include all written supporting data.

16.1.3. Burden of Proof. The party making the Claim must substantiate the Claim.

16.2. Time Limits on Claims.

16.2.1. Unless otherwise provided, all Claims must be made within twenty-one (21) days after the occurrence of the event giving rise to such Claim or within twenty-one (21) days after the claimant first recognizes the condition giving rise to the Claim, whichever is later. Any change or addition to a previously made Claim shall be made by a written notice within the twenty-one-day period in order to be valid.

16.3. Continuing Contract Performance.

16.3.1. Pending final resolution of a Claim including arbitration, unless otherwise agreed in writing, the **Contractor** shall proceed diligently with performance of the Contract and the **City** shall continue to make payments in accordance with the Contract Documents.

16.4. Types of Claims.

16.4.1. Claims for Differing Subsurface or Latent Physical Conditions. (*Reference:* M.G.L. c. 30, §39N;). If, during the progress of the Work, the **Contractor** or the **City** discovers that the actual subsurface or latent physical conditions encountered at the Site differ substantially or materially from those shown on the Plans or indicated in the Contract Documents, either the **Contractor** or the **City** may request an equitable adjustment in the Contract Sum of the Contract applying to Work affected by the differing Site conditions. A request for such an adjustment shall be in writing and shall be delivered by the party making such claim to the other party as soon as possible after such conditions are discovered. Upon receipt of such a claim from a **Contractor**, or upon its own initiative, the **City** shall make an investigation of such physical conditions, and if they differ substantially or materially from those shown on the Plans or indicated in the Contract Documents or from those ordinarily encountered and generally recognized as inherent in Work of the character provided for in the Plans and Contract Documents and are of such a nature as to cause an increase or decrease in the cost of performance of the Work or a change in the construction methods required for the performance of the Work which results in an increase or decrease in the cost of the Work, the **City** shall make an equitable adjustment in the Contract Sum and the Contract shall be modified in writing accordingly.

16.4.2. Claims for Additional Cost. If the **Contractor** claims that any acts or omissions of the **City** or the **Design Professional**, including any instructions or orders, whether oral, written, by drawings, or otherwise, involve extra cost or time, and the **Contractor** has not received a written acknowledgment by the **City** or the **Design Professional** that extra payment will

be made or time extended on account thereof, the **Contractor** shall promptly so notify the **Design Professional** in writing of such Claim and shall proceed with the Work relating to such Claim and all rights of both parties with respect to such Claim shall be deemed to have been reserved. No Claim by the **Contractor** on account of such acts, omissions, instructions, or orders shall be valid unless the **Contractor** has so notified the **Design Professional** before proceeding.

16.4.2.1. Under no circumstances shall a Claim be made for additional cost where adverse weather conditions are the basis for the Claim.

16.4.3. Claims for Additional Time. If the **Contractor** wishes to make a Claim for an increase in the Contract Time, written notice as provided herein shall be given. The **Contractor** shall have the burden of demonstrating the effect of the claimed delay on the Contract Time and shall furnish the **Design Professional** with such documentation relating thereto as the **Design Professional** may reasonably require. Under no circumstances shall the **Contractor** make a Claim for an increase in the Contract Time due to a change in the **Contractor's** early completion date. If the increase in the Contract Time extends beyond the Contract Time established by the **City**, only the time that so extends beyond the Contract Time shall be reviewed and considered. In the case of a continuing delay, only one Claim is necessary.

16.4.3.1. Under no circumstances shall a Claim be made for additional time where adverse weather conditions are the basis for the Claim.

16.4.4. Claims for Injury to Person or Damage to Property. Should either party to the Contract suffer injury to person or damage to property because of any error, omission, or act of the other party or of any of the other party's employees or agents or others for whose acts the other party is legally liable, a Claim will be made in writing to the other party within twenty-one (21) days of the occurrence of the act giving rise to the injury or damage.

16.5. Review of Claims.

16.5.1. Initial Referral. All Claims, the bases of which arise prior to final payment or the earlier termination of the Contract, shall be referred initially to the **Design Professional** for action as provided herein.

16.5.2. Time Period and Action. The **Design Professional** shall review Claims and shall do one of the following within fourteen (14) days of receipt of the Claim:

16.5.2.1. defer any action with respect to all or any part of a Claim for the purpose of requesting and receiving additional information from either party;

16.5.2.2. decline in writing to render a decision for any reason which it deems appropriate (including, but not limited to, the fact that the Claim involves allegations of fault on the part of the **Design Professional**); or

16.5.2.3. render a decision on all or a part of the Claim.

16.5.3. If the **Design Professional** requests additional information, the **Design Professional** shall take action with respect to the Claim no later than fourteen (14) days after receipt of the additional information. The **Design Professional** shall notify the parties in writing of its disposition of such Claim. If the **Design Professional** renders a decision or declines to render a decision, either party may proceed in accordance with paragraph 16.7.

16.6. Decisions.

16.6.1. Decisions by the City or the Design Professional. (*Reference:* M.G.L. c. 30, §39P;). In every case in which this Contract requires the **City**, any official, or its **Design Professional** to make a decision on interpretation of the Specifications, approval of equipment, material or any other approval, or progress of the Work, the decision shall be made promptly and, in any event, no later than fourteen (14) days after the written submission for decision; but if such decision requires extended investigation and study, the **City**, the official, or the **Design Professional** shall, within fourteen (14) days after the receipt of the submission, give the party making the submission written notice of the reasons why the decision cannot be made within the thirty-day period and the date by which the decision will be made.

16.6.2. When Decision of the Design Professional is Final and Binding. The decision of the **Design Professional** shall be final and binding on the parties, unless a party files suit or a demand for arbitration within thirty (30) days after the date of the decision.

16.6.3. When Decision of the Design Professional is Not Final and Binding. (*Reference:* M.G.L. c. 30, §39J). Notwithstanding any contrary provision of this Contract, no decision by the **City** or by the **Design Professional** on a dispute, whether of fact or of law, arising under said Contract shall be final or conclusive if such decision is made in bad faith, fraudulently, capriciously, arbitrarily, is unsupported by substantial evidence, or is based upon error of law.

16.6.4. Resolved Claims. If a Claim is resolved, the **Design Professional** shall obtain or prepare the appropriate documentation and provide the **City** and the **Contractor** with a copy of same.

16.7. Arbitration.

16.7.1. Controversies and Claims Subject to Arbitration. Any controversy or Claim arising out of or related to the

Contract, or the breach thereof, shall be settled by arbitration in accordance with the Construction Industry Arbitration Rules of the American Arbitration Association, and judgment upon the award rendered by the arbitrator or arbitrators may be entered in any court having jurisdiction thereof, except controversies or Claims relating to aesthetic effect, subject to the provisions of paragraph 16.7.7. In any such arbitration in which the amount stated in the demand is $100,000 or less, the American Arbitration Association shall appoint a single arbitrator in accordance with such Rules, who shall be a lawyer. In any such arbitration in which the amount stated in the demand is in excess of $100,000, the demand shall include the name of an arbitrator appointed by the claimant. The respondent shall appoint a second arbitrator and shall notify the claimant in writing of such appointment within thirty (30) days of receipt of the demand, failing which the matter shall be decided by the arbitrator named in the claimant's demand. Within thirty (30) days after the claimant's receipt of notice of the appointment of the second arbitrator, the two arbitrators shall appoint a neutral arbitrator and shall notify the parties in writing of such appointment, failing which either party may apply to the American Arbitration Association to appoint such neutral arbitrator. If such neutral arbitrator is appointed by the American Arbitration Association, he or she shall be a lawyer.

16.7.2. Rules for Arbitration. If the neutral arbitrator is appointed by the American Arbitration Association, the said Association shall administer the arbitration and its Construction Industry Arbitration Rules shall govern all aspects of the proceeding including the enforcement of any award. If the neutral arbitrator is not appointed by the American Arbitration Association, then the panel of arbitrators shall act as the administrator of the arbitration but the Construction Industry Arbitration Rules of the Association shall nonetheless govern all aspects of the proceeding, including the enforcement of any award, provided however that the arbitration panel shall have all of the powers and duties conferred on the Association pursuant to said rules. In addition, the following rules shall govern the selection of arbitrators and the proceedings:

16.7.2.1. Neither party may appoint as arbitrator an employee or an owner of that party, nor the parent, spouse, or child of an employee or owner of that party.

16.7.2.2. After the neutral arbitrator has been appointed, neither party may engage in *ex parte* communication with any arbitrator.

16.7.3. When Arbitration May Be Demanded. Demand for arbitration of any Claim, the basis of which arises prior to final payment or the earlier termination of the Contract may not be made before the earlier of (1) the date on which the **Design Professional** has rendered a written decision on the Claim or has notified the parties in writing that such decision will not be rendered or (2) forty-five (45) days following receipt by the **Design Professional** of a written request for a decision sent by registered or certified mail to both the **Design Professional** and the other party to this Contract.

16.7.3.1. In no event shall a demand for arbitration be made after the date when the institution of legal or equitable proceedings based on such Claim would be barred by the applicable statute of limitations.

16.7.4. Limitation on Consolidation or Joinder. No arbitration arising out of or relating to the Contract Documents shall include, by consolidation or joinder or in any other manner, the **Design Professional**, the **Design Professional's** employees or consultants, except by written consent containing specific reference to the Contract and signed by the **Design Professional**, the **City**, the **Contractor,** and any other person or entity sought to be joined. No arbitration shall include, by consolidation or joinder or in any other manner, parties other than the **City**, the **Contractor**, a separate contractor, and other persons substantially involved in a common question of fact or law whose presence is required if complete relief is to be accorded in arbitration. No person or entity other than the **City**, the **Contractor,** or a separate contractor shall be included as an original third party or additional third party to an arbitration whose interest or responsibility is insubstantial. Consent to arbitration involving an additional person or entity shall not constitute consent to arbitration of a dispute not described therein or with a person or entity so named or described herein. The foregoing agreement to arbitrate and other agreements to arbitrate with an additional person or entity duly consented to by parties to the Contract shall be specifically enforceable under applicable law in any court having jurisdiction thereof.

16.7.5. Claims and Timely Assertion of Claims. A party who files a notice of demand for arbitration must assert in the demand all Claims then known to that party on which arbitration is permitted to be demanded. When a party fails to include a Claim through oversight, inadvertence, or excusable neglect, or when a Claim has matured or been acquired subsequently, the arbitrator or arbitrators may permit amendment.

16.7.6. Award Final. The award rendered by the arbitrator or arbitrators shall be final, and judgment may be entered upon it in accordance with applicable law in any court having jurisdiction thereof.

16.7.7. The City's Reservation of Rights. Notwithstanding any provision contained in this Article 16 or elsewhere in the Contract Documents, the **City** reserves the following rights in connection with Claims between the **City** and the **Contractor**, which rights may be exercised by the **City** unilaterally, in the **City's** sole discretion, and without the consent of the **Contractor**:

16.7.7.1. the right to institute legal action against the **Contractor** in any court of competent jurisdiction in lieu of demanding arbitration, in which case the dispute or disputes which are the subject of such action shall be decided by such court, and not by arbitration;

16.7.7.2. the right to obtain from any court of competent jurisdiction a stay of any arbitration instituted by the **Contractor**, provided that the application for such stay is made before the appointment of the neutral arbitrator in

such arbitration, in which case the dispute or disputes which are the subject of such arbitration shall be decided by such court and not by arbitration;

16.7.7.3. the right to require the **Contractor** to join as a party in any arbitration between the **City** and the **Design Professional** relating to the Project, in which case the **Contractor** agrees to be bound by the decision of the arbitrator or arbitrators in such arbitration.

16.7.8. In case the **City** elects to proceed in accordance with 16.7.7.1. or 16.7.7.2. above, the word "litigation" shall be deemed to replace the word "arbitration" wherever the latter word appears in the Contract Documents.

ARTICLE 17
EMERGENCIES

17.1. In an emergency affecting the health and safety of persons or property, the **Contractor** shall act to prevent threatened damage, injury, or loss.

17.2. In emergencies affecting the health, safety, or protection of persons, the Work or property at the Site or adjacent thereto, the **Contractor**, without special instruction or authorization from the **City** or the **Design Professional**, is obligated to act to prevent threatened damage, injury, or loss. The **Contractor** shall give the **Design Professional** prompt written notice if the **Contractor** believes that any significant changes in the Work or variations from the Contract Documents have been caused thereby. If the **Design Professional** determines that a change in the Contract Documents is required because of the action taken by the **Contractor** in response to such an emergency, a **Construction Change** Directive or Change Order will be issued to document the consequences of such action.

ARTICLE 18
TERMINATION OR SUSPENSION OF THE CONTRACT

18.1. Suspension by the City.

18.1.1. At any time and without cause, the **City** may suspend the Work or any portion thereof for a period of not more than ninety (90) days by notice in writing to the **Contractor** and the **Design Professional** that will fix the date on which Work will be resumed. The **Contractor** shall resume Work on the date so fixed. The **Contractor** shall be allowed an adjustment in the Contract Sum or an extension of the Contract Time, or both, directly attributable to any such suspension if the **Contractor** makes an approved Claim therefor, provided, however, that if there is a suspension, delay or interruption for fifteen days or more or due to a failure of the Awarding Authority to act within the time specified in this contract, the Awarding Authority shall make an adjustment in the contract price for any increase in the cost of performance of this contract but shall not include any profit to the General Contractor on such increase; and provided further, that the Awarding Authority shall not make any adjustment in the contract price under this provision for any suspension, delay, interruption, or failure to act to the extent that such is due to any cause for which this contract provides for an equitable adjustment of the contract price under any other contract provisions. The General Contractor must submit the amount of a claim under provision (1) to the Awarding Authority in writing as soon as practicable after the end of the suspension, delay, interruption or failure to act and, in any event, not later than the date of final payment under this contract and, except for costs due to a suspension order, the Awarding Authority shall not approve any costs in the claim incurred more than twenty days before the General Contractor notified the Awarding Authority in writing of the act or failure to act involved in the claim. The General Contractor must submit the amount of a claim under provision (1) to the Awarding Authority in writing as soon as practicable after the end of the suspension, delay, interruption or failure to act and, in any event, not later than the date of final payment under this contract and, except for costs due to a suspension order, the Awarding Authority shall not approve any costs in the claim incurred more than twenty days before the General Contractor notified the Awarding Authority in writing of the act or failure to act involved in the claim.

18.1.1.1 Notwithstanding the above, if the City is required to suspend the work as a result of a request from the Office of the Attorney General in connection with a bid protest or an injunction, the Contractor shall not have a claim for damages, but the City shall extend the date of substantial completion for a period of time commensurate with the period of the suspension, and the liquidated damages clause shall not take effect until the extended date of substantial completion. If any of the following occurrences causes a delay in the work, the Contractor shall immediately notify CONTRACTING DEPARTMENT (AS STATED ON THE FIRST PAGE OF THE AGREEMENT) in writing. If, upon investigation, the City finds that the delay is excusable, the City shall extend the date of substantial completion for a period of time commensurate with the period of the excusable delay, and the liquidated damages clause shall not take effect until the extended date of substantial completion:(1) any acts of the Government, including controls or restrictions upon or requisitioning of materials, equipment, tools, or labor by reason of war, National Defense, or any other national emergency; (2) delays which are caused by the City and which are not occasioned by the Contractor's failure to supply CONTRACTING DEPARTMENT (AS STATED ON THE FIRST PAGE OF THE AGREEMENT) or its design professional with progress schedules, documents, samples, and the like, in a timely manner; (3) causes not reasonably foreseeable by the parties to this Contract, which are beyond the reasonable

control of the Contractor, such as blizzards, floods, hurricanes, tornadoes, and strikes; (4) any delay of any subcontractor resulting from paragraphs (1), (2), or (3).

18.1.2. If the Work is defective, if the **Contractor** fails to provide a sufficient number of skilled workers or suitable materials or equipment, or if the **Contractor** defaults or neglects to carry out the Work in accordance with the Contract Documents and fails within a seven-day period after receipt of written notice from the **City** to begin and prosecute correction of such default or neglect with diligence and promptness, the **City** may correct such deficiencies, without prejudice to other remedies the **City** may have. In such case, an appropriate **Construction Change** Directive shall be issued deducting from payments then or thereafter due to the **Contractor** the cost of correcting such deficiencies including compensation for the **Design Professional's** additional services and expenses made necessary by such default, neglect, or failure and any and all direct, indirect, or consequential costs associated with the order to stop the Work. If such payments then or thereafter due the **Contractor** are not sufficient to cover such amounts, the **Contractor** shall immediately pay the difference to the **City**. The **Contractor** shall remain responsible for maintaining progress and shall not be entitled to any increase in the Contract Time or the Contract Sum.

18.2. Termination by the Contractor.

18.2.1. If, through no act or fault of the **Contractor**, a Subcontractor, or a Sub-subcontractor, the Work is suspended for a period of more than ninety (90) days by the **City**, or under an order of court or other public authority, or the **Design Professional** fails to act on any application for payment within thirty (30) days after it is submitted in proper form and content or the **City** fails for thirty (30) days to pay the **Contractor** any sum finally determined to be due, then the **Contractor** may terminate the Contract upon seven (7) days' written notice to the **City**, provided that the **City** does not remedy such suspension or failure within that time.

18.3. Termination by the City.

18.3.1. If the **Contractor** is adjudged a bankrupt, or if the **Contractor** makes a general assignment for the benefit of the **Contractor's** creditors, or if a receiver is appointed on account of the **Contractor's** insolvency, or if the Contractor makes a written admission of the Contractor's inability to pay debts, or if the Contractor becomes a debtor or defendant in (i) a voluntary or involuntary petition in bankruptcy, (ii) a petition for appointment of a receiver, (iii) a levy of an attachment or execution, (iv) a winding up or dissolution of a partnership or corporation, (v) or any other proceeding under which a court of competent jurisdiction assumes custody or control over the Contractor, or if the **Contractor** persistently or repeatedly refuses or fails, except in cases for which extension of time is provided, to supply enough properly skilled workers or proper materials, or fails to prosecute the work with such diligence as will, in the reasonable estimation of the City, ensure substantial completion within the time specified in the Contract Documents, or if the **Contractor** fails to make prompt payment to Subcontractors or for materials or labor, or persistently disregards laws, ordinances, rules, regulations, or orders of any public authority having jurisdiction or disregards an instruction, order, or decision of the **Design Professional**, or otherwise is in breach of any provision of the Contract and has failed to cure such breach after written notice from the City specifying 1) the breach, 2) what must be done to cure the breach, and 3) the time within which the breach must be cured, or otherwise is guilty of substantial violation of any provision of the Contract, then the **Contractor** shall be in default, and the **City** may, without prejudice to any other right or remedy and upon written notice to the **Contractor**, temporarily withhold cash payments pending correction of the deficiency, hold the Contractor and its sureties liabile in damages, require the Contractor's sureties to complete the Contract, take possession of all materials, tools, appliances, equipment, construction equipment and machinery and vehicles, offices and other facilities on the Project Site, and all materials intended for the Work, wherever stored, without liability for loss or damage, following which use, the Contractor shall be liable for their removal from the site; and, seven (7) days after such notice, may terminate the employment of the **Contractor**, accept assignment of any or all subcontracts pursuant to Paragraph 6.6.1.1, and finish the Work by whatever method the **City** may deem expedient (including but not limited to using the services of another contractor (in which case the City shall have no obligation to use a competitive process to obtain the lowest contract prices) and look to the Contractor and the Contractor's sureties for the difference between the cost to complete the work and the contract sum hereunder.

. The **City** shall be entitled to collect from the **Contractor** all direct, indirect, and consequential damages suffered by the **City** on account of the **Contractor's** default, including without limitation additional services and expenses of the **Design Professional** made necessary thereby. The **City** shall be entitled to hold all amounts due to the **Contractor** at the date of termination until all of the **City's** damages have been established, and to apply such amounts to such damages.

18.3.1.1. HUD Action. If the Contractor is in default, HUD and/or any other administering agency named herein may, with or without the consent of the City, cancel, suspend, or terminate this Contract in whole or in part; require the withholding or disallowance all or part of the funding for the project; declare the contractor ineligible for further Government contracts or avail itself of any other remedies available under the law.

18.3.2. (*Reference:* Somerville Municipal Code Chapter 2.117, Section 2.117.110C). In the event the **Contractor** or any of its agents or employees violates any provision of Somerville Municipal Code Chapter 2.117 that is applicable to **City**

contractors in connection with the awarding, administration, or performance of the Contract, the **City** may terminate the sat Contract.

18.3.3. (a) The City may terminate this Contract without cause, at any time, effective upon the date of termination specified by written notice to the Contractor, in which case, the Contractor shall be compensated for: (1) sums due under this Contract incurred up to the date of termination for all Work performed and accepted by the City up to the termination date, calculated on a percentage completion basis covering the period of time between the last approved application for payment and the date of termination using the progress schedule and schedule of values. The Contractor shall use its best efforts to mitigate any expenses and shall in no event incur any new obligations after the date of termination.

(1) Payment by the City as provided in this section shall be deemed to fully compensate the Contractor for all expenses and those of any consultants, subcontractors and suppliers, directly or indirectly attributable to the termination. Lost profits shall not be payable. Any such termination shall not give rise to any cause of action for damages against the City.

(b) Contractor's Duties Upon Termination For Convenience. Upon termination of this Contract without cause, the Contractor shall: (1) immediately stop the Work; (2) stop placing orders and Subcontracts in connection with this Contract; (3) cancel all existing orders and Subcontracts (subject to the City providing notice that it accepts assignment of any or all subcontracts pursuant to Paragraph 6.6.1.1); (4) surrender the site to City in a safe condition; and (5) promptly transfer to City all materials, supplies, work in process, appliances, facilities, equipment and machinery of this Contract, and all work product, plans, drawings, specifications and other information and documents used in connection with Services performed under this Contract. Failure by the Contractor to comply with said duties shall relieve the City of its obligation to compensate the Contractor, as provided for under this section.

ARTICLE 19
AMERICANS WITH DISABILITIES ACT (42 U.S. 12131)

19.1. On July 26, 1994, the Americans with Disabilities Act ("the Act") became effective for employers of fifteen or more employees.

19.2. The Act protects against discrimination of the basis of "disability," which is defined as a physical or mental impairment that substantially limits at least one "major life activity;" or discrimination against an individual who has a record of such impairment; or discrimination against an individual being regarded - even if inaccurately - as having such impairment. The Act also expressly prohibits job discrimination that is based on any individual's relationship or association with a disabled person.

19.3. If the **Contractor** is subject to the Act, it must comply with its provisions.

ARTICLE 20
WRITTEN NOTICE TO THE PARTIES

20.1. In General.

20.1.1. All written communications from the **Design Professional** to the **Contractor** shall be copied to the **City**. All written communications from the **Contractor** to the **Design Professional** shall be copied to the **City**. All written communications from the **Contractor** to the **City** shall be copied to the **Design Professional**.

20.2. Addresses.

20.2.1. To the City. Written notice to the **City** shall be sent or hand-delivered to:

Mayor
City of Somerville
93 Highland Avenue
Somerville, MA 02143

City Solicitor
Law Department
93 Highland Avenue
Somerville, MA 02143

Director of Contracting Department (as stated on first page of this Agreement)
City Hall
93 Highland Avenue
Somerville, MA 02143

20.2.2. To the Contractor. Both the address given on the bid form upon which the Agreement is founded and the **Contractor's** office at or near the Site of the Work are hereby designated as places to either of which notices, letters, and other communications to the **Contractor** shall be certified, mailed, or delivered. Delivery of any notice, letter, or other communication to the **Contractor** at or depositing same in a postpaid wrapper directed to either place shall be deemed sufficient service thereof upon the **Contractor**. Written notice shall be deemed to have been duly served on the **Contractor** if it is sent or hand-delivered to any member or officer of the **Contractor**. The date of said service shall be the date of such delivery or mailing. The address may be changed at any time by an instrument in writing, executed and acknowledged by the **Contractor** and delivered to the **City** and to the **Design Professional**. Nothing herein contained shall be deemed to preclude or render inoperative the service of any notice, letter. or other communication upon the **Contractor** personally. Moreover, any notice, letter, or other communication required under the Contract may be served on the **Contractor's** representative at job meetings. The **Contractor** shall provide the **City** with its change of address seven (7) days prior to its effective date.

20.2.3. To the Design Professional. Written notice to the **Design Professional** shall be sent or hand-delivered to the address appearing on the Project Manual. Written notice shall be deemed to have been duly served on the **Design Professional** if it is sent or hand-delivered to any member or officer of the **Design Professional**.

ARTICLE 21
MISCELLANEOUS PROVISIONS

21.1. Governing Law.

21.1.1. This Contract shall be governed by the laws of the Commonwealth of Massachusetts and the United States of America.

21.2. Venue.

21.2.1. Venue for any court action or proceeding shall be Middlesex County in the Commonwealth of Massachusetts only. The **Contractor**, all Subcontractors, and Suppliers waive any and all jurisdictional and venue defenses.

21.3. Successors and Assigns.

21.3.1. The **Contractor** shall not assign, in whole or in part, its rights and obligations under the Contract Documents without prior written consent of the **City**. An assignment without the prior written consent of the **City** shall not relieve the **Contractor** of its obligations thereunder.

21.3.2. The **City** and the **Contractor** respectively bind themselves, their partners, successors, assigns, and legal representatives to the other party hereto and to partners, successors, assigns, and legal representatives of such other party in respect to covenants, agreements, and obligations contained in the Contract Documents.

21.4. Statutory Limitation Period.

21.4.1. It is expressly agreed that the obligations of the **Contractor** hereunder arise out of contractual duties, and that the failure of the **Contractor** to comply with the requirements of the Contract Documents shall constitute a breach of contract, not a tort, for the purpose of applicable statutes of limitations and repose. Any cause of action which the **City** may have on account of such failure shall be deemed to accrue only when the **City** has obtained actual knowledge of such failure, not before.

21.5. Rights and Remedies.

21.5.1. Duties and obligations imposed by the Contract Documents and rights and remedies available thereunder shall be in addition to and not a limitation of duties, obligations, rights, and remedies otherwise imposed or available by law.

21.5.2. No action or failure to act by the **City**, the **Design Professional,** or the **Contractor** shall constitute a waiver of a right or duty afforded them under the Contract, nor shall such action or failure to act constitute approval of or acquiescence in a breach thereunder, except as may be specifically agreed in writing.

21.6 Severability. In the event that any provision of this Agreement is found to be legally unenforceable, the remainder of the Agreement shall remain in full force and effect.

21.7 Conflict of Interest Laws. The City and the Contractor shall comply with all applicable conflict of interest statutes and regulations.

21.8 If this contract is in excess of $2,000 and is federally funded, the Contractor shall comply with the Copeland "Anti-Kickback Act" (18 U.S.C. 874 and 29 CFR Part 3), and shall not induce any person employed in the construction, completion, or repair of a public building or public work, to give up any part of the compensation to which he would otherwise be entitled.

21.9. EQUAL EMPLOYMENT OPPORTUNITY/NONDISCRIMINATION

a) the Contractor shall not discriminate against any employee or applicant for employment because of race, color, religion, sex, marital status, sexual orientation, national origin, age, disability, Vietnam Era veteran status or because an employee or applicant is a recipient of federal, state, or local public assistance or housing subsidies; and

b) the Contractor shall not discriminate, in any stage of the contract from award to completion, in the selection or retention of subcontractors, suppliers, and materialmen, or in the procurement of materials or supplies, or the rental of equipment, on the basis of race, religion, sex, marital status, sexual orientation, national origin, age, disability, Vietnam Era veteran status, or because an individual is a recipient of federal, state, or local public assistance or housing subsidies; and

c) the Contractor shall post an equal employment opportunity notice in conspicuous places at the worksite, shall make copies of such notice available to employees and job applicants, and shall send such notice to each labor union or representative of workers with which the Contractor has a collective bargaining agreement or other contract or understanding; and

d) the Contractor shall, to the greatest extent feasible, give employment and on-site training opportunities, to lower-income, minority, women, and disabled members of the local community and shall award subcontracts, when possible, to Minority Business Enterprises (MBE) and Women Business Enterprises (WBE).

e) the contractor shall include language similar to the above in all subcontracts.

END

PART 3: TECHNICAL SPECIFICATIONS

The work done under this contract includes construction, repair and replacement of cement concrete sidewalks, ADA-compliant wheelchair ramps, driveway aprons and the installation of granite curb on various streets and intersections throughout the City of Somerville, including the demolition, removal and disposal of materials as directed by the City of Somerville Department of Public Works.

This project will be completed in 2 phases. Phase 1 of this project will be completed by 06/30/2020. Phase 2 of this project will be subjected to budget approval.

General

The contractor shall comply with all Federal, State, and Local Regulations and Ordinances governing the type of work detailed in these specifications. The work to be performed under this contract consists of furnishing labor, materials, and equipment for the specified repairs at various locations throughout the City of Somerville. The request for work will come from the DPW Superintendent of Highway, or his designee authorizing the work to be performed on a City sidewalk.

Examination of Property

The Contractor shall fully acquaint himself with the existing conditions within the City of Somerville. The City will not be responsible for the failure of the Contractor to do so.

Protection of Property

The contractor shall take all precautions to protect the property of the City from injury and shall be held responsible for all employees or any person or persons, instrument or device directly or indirectly employed by him. Any corresponding damages shall be replaced, repaired and paid for by the contractor to the satisfaction of the City.

Permits and Fees

The Contractor is responsible for all permits. The contractor must purchase 'no parking' signs from traffic and parking, contractor will be responsible for police details.

Quality of Workmanship

All work must be done in a thorough workmanlike manner by fully qualified personal. The contractor must be fully qualified to do all work described in these specifications. The City reserves the right to judge on the quality of workmanship of those bidding based either on work done for the City in the past or on work done for other companies and/or cities. Contractor must submit with his bid three (3) references showing similar work performed.

Scope of Work

<u>Sidewalks and Ramps</u>

The Contractor shall furnish all labor and materials to repair, replace and construct sidewalks and ADA accessible ramps throughout the City of Somerville.

- All sidewalks, driveway aprons and ADA ramps and warning pads must adhere to the standards as laid out in the attached specifications.
- Current driveway openings must be maintained unless approval is given by Highway Superintendent/Highway Foreman
- Any asphalt removed will be replaced with concrete.

- If concrete cannot be used on a sidewalk panel due to location of a street tree, flexipave or equivalent may be used in the back side of tree with approval of Highway Superintendent/Highway Foreman.
- Must demolish and remove/dispose of all old sidewalk/driveway/ADA ramp to be replaced
- Must provide police detail
- No Parking signs must be purchased at Traffic and Parking
- No Parking signs must be posted 48 hours prior to work can be performed as per city ordinance.
- Whenever appropriate, walk-boards must be placed to ensure safe access from building entrances to roads.
- No lampblack is to be used.

Examination of Premises

The Contractor shall fully inform himself of the existing conditions where repairs are to be performed.

The Contractor shall provide materials of a quality equal to or exceeding that of original materials and/or shall be of a quality compatible to existing materials to provide desired results, as approved by the City.

Service

The Contractor shall provide qualified service personnel to assure against unreasonable delay. The Contractor shall provide qualified personnel to complete the demolition, removal and disposal of old sidewalk material. The repair and replacement of damaged sidewalk panels, ADA ramps, driveway aprons.

Protection of Property

The Contractor shall take all precautions to protect municipal and private property from injury and be held responsible for all employees or any person or persons, instrument or device directly or indirectly employed by him. Any corresponding damages shall be replaced, repaired and paid for by the Contractor to the satisfaction of all parties concerned including the City of Somerville.

Quality of Workmanship

Fully qualified skilled personnel must do all work in a thorough workmanlike manner. The Contractor shall be fully qualified to perform repairs and maintenance to city property and sidewalks. The City of Somerville reserves the right to judge on the quality of workmanship of those bidding based either on prior work performed for the City of Somerville, work performed for private entities, and other public works projects. All bidders will be required to provide reference information at the time of bid.

Quality of workmanship and references will be a determining factor when awarding this bid.

Experience

The contractor shall have been established in the field of sidewalk repairs, or general construction for at least five (5) years.

Authorization

The Commissioner of Public Works, the Superintendent of Highway and/or an authorized agent of the City of Somerville will authorize repairs.

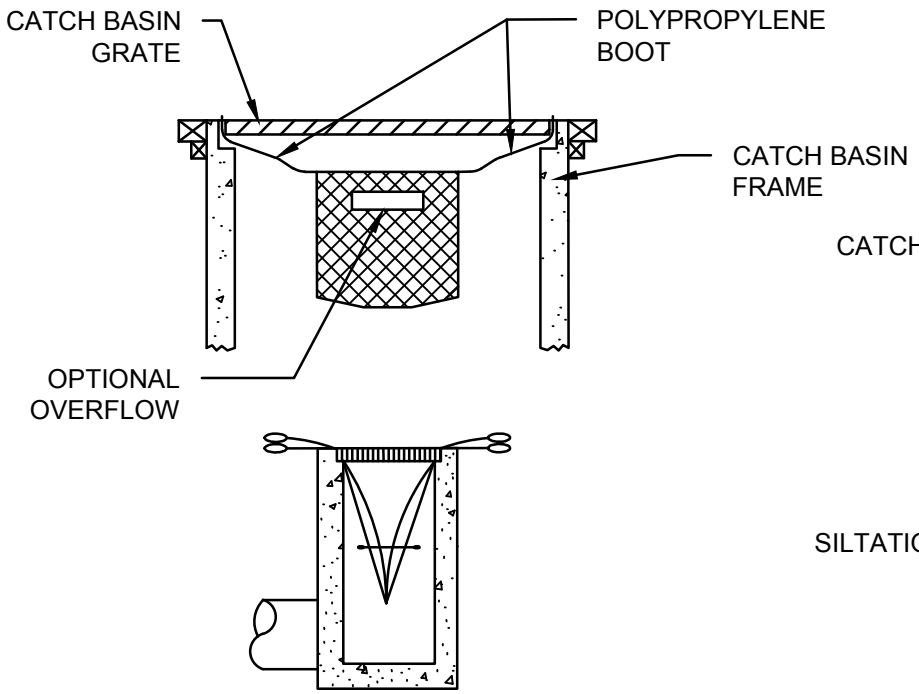

CROSS SECTION

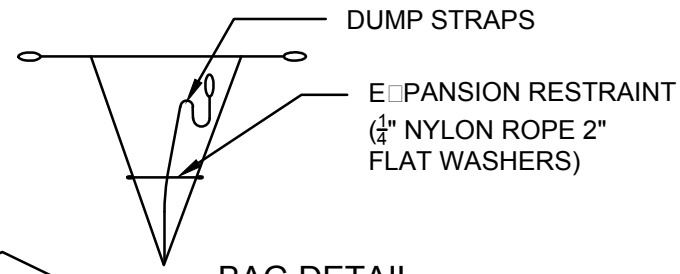

BAG DETAIL

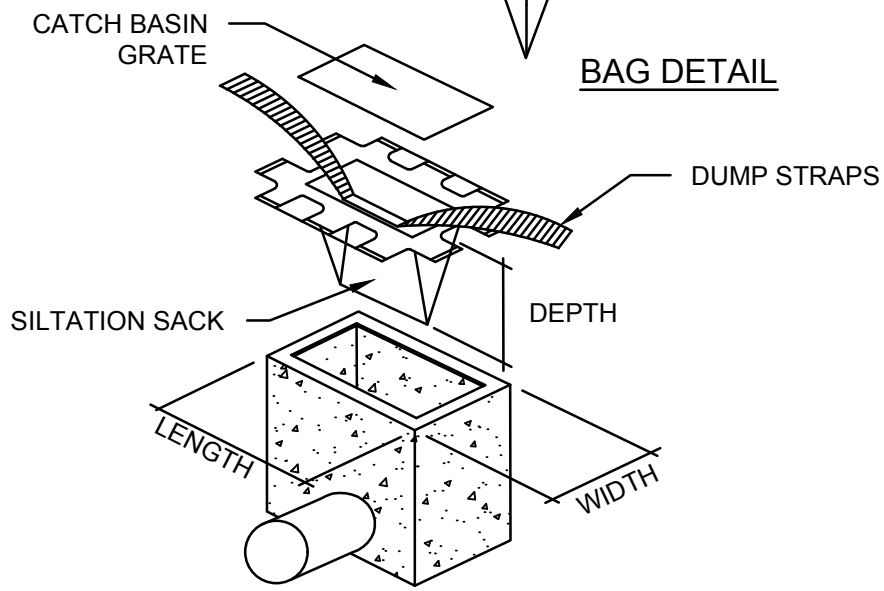

NOTES:

1. THIS METHOD OF INLET PROTECTION IS APPLICABLE WHERE THE INLET DRAINS SHEET, OVERLAND AND CONCENTRATED FLOWS (NOT GREATER THAN 1 CFS). THE METHOD CAN DRAIN FLAT AREA TO STEEP SLOPES. INLET CAPACITY WILL DECREASE WITH THIS METHOD AND CONTRACTOR SHALL E□PECT FLOODING TO OCCUR DURING HIGH FLOW EVENTS.

2. INSPECTION SCHEDULE SHALL COMPLY WITH THE 2017 EPA CONSTRUCTION GENERAL PERMIT OR LATEST EDITION.

3. AFTER ANY SIGNIFICANT RAINFALL (0.25" OR GREATER), THE SILTATION SACK SHALL BE INSPECTED BY AN AUTHORIZED REPRESENTATIVE. THE SILTATION SACK SHALL BE REPLACED WHEN THE STRUCTURAL INTEGRITY IS DEEMED INEFFECTIVE OR WHEN RECOMMENDED BY THE AUTHORIZED USER. ANY DAMAGE TO THE SILTATION SACK SHALL BE CORRECTED IMMEDIATELY.

4. MAINTENANCE SHALL OCCUR WHEN NECESSARY. SILTATION SACKS SHALL BE CLEANED ONCE THE BAG IS FILLED HALF WAY WITH DEBRIS. CONTRACTOR SHALL REMOVE SILTATION SACK AND PLACE NEW UNIT. DO NOT EMPTY SILTATION SACK CONTENTS INTO THE CATCH BASIN.

CATCH BASIN W/ SILTATION SACK INLET PROTECTION

CITY OF SOMERVILLE STANDARD SPECIFICATIONS AND DETAILS

SCALE: N.T.S.	DATE OF ISSUE: 5/18	SPEC. REF#: 01568	DETAIL NUMBER: E-1.2.0
REVISION:			

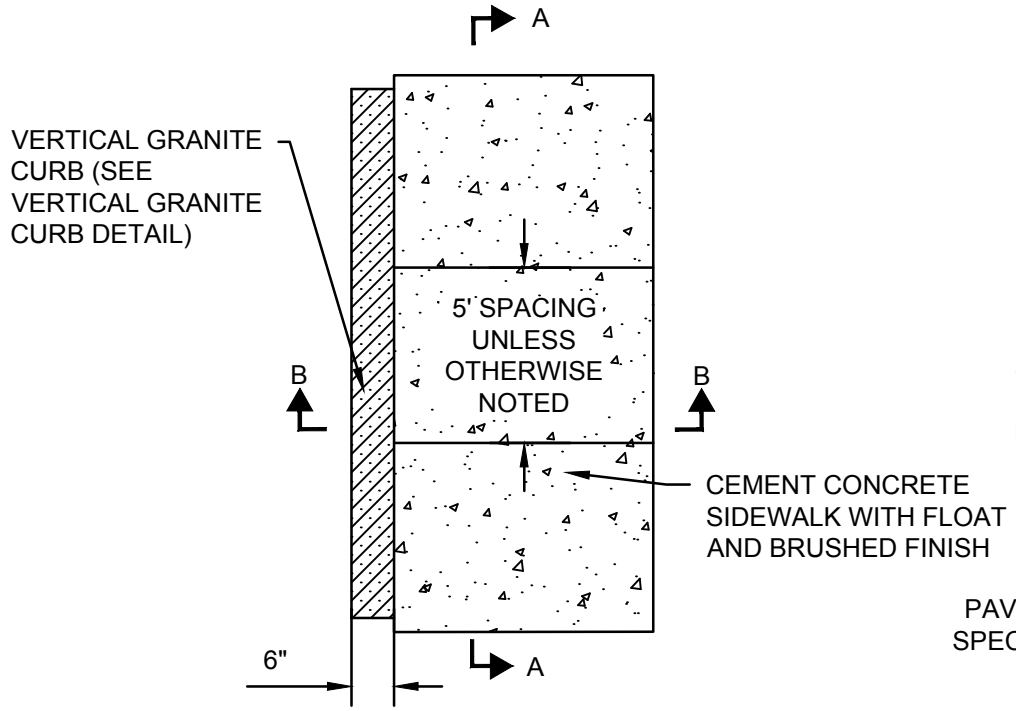

PLAN

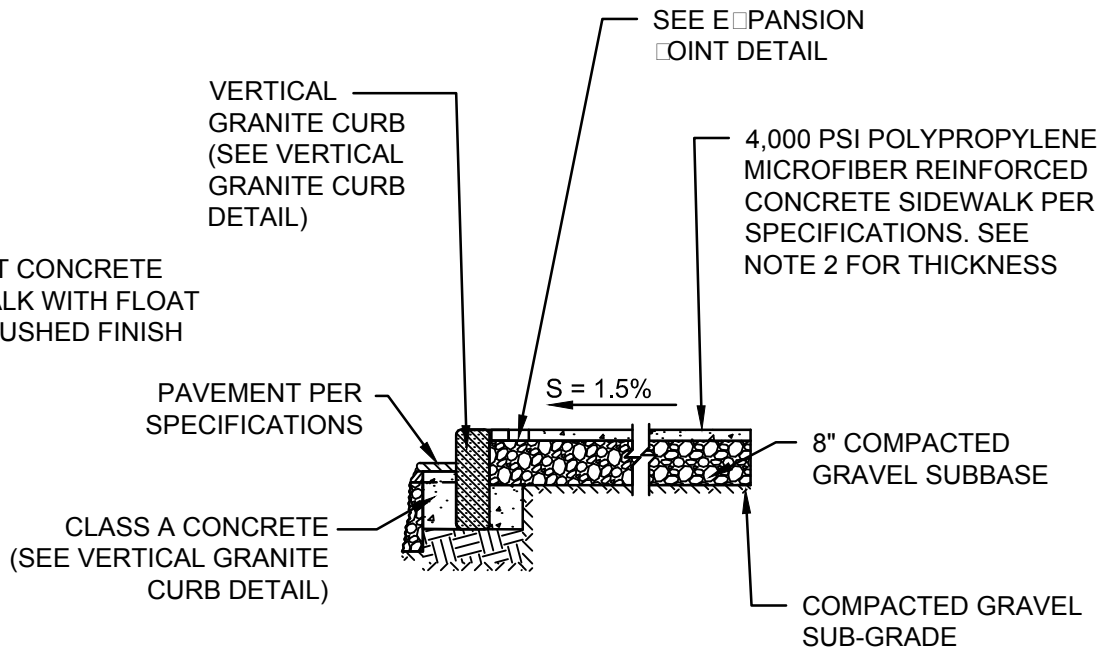

SECTION B-B

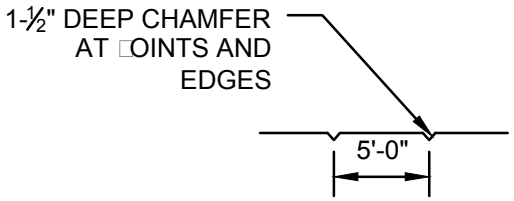

SECTION A-A

NOTES:

1. NEW SIDEWALK SHALL MATCH WIDTH OF E□ISTING SIDEWALK UNLESS OTHERWISE NOTED.
2. CONCRETE SIDEWALK TO BE 6" THICK AT DRIVEWAYS AND INTERSECTIONS AND 4" THICK ELSEWHERE.
3. SIDEWALKS TO BE BUILT ACCORDING TO ADA AND MA AAB REGULATIONS, 2.0□ MA□ (0□ TOLERANCE) CROSS SLOPE.

CONCRETE SIDEWALK

CITY OF SOMERVILLE STANDARD SPECIFICATIONS AND DETAILS

SCALE: N.T.S.	DATE OF ISSUE: 5/18	SPEC. REF#: 02524	DETAIL NUMBER: R-1.1.0
REVISION:			

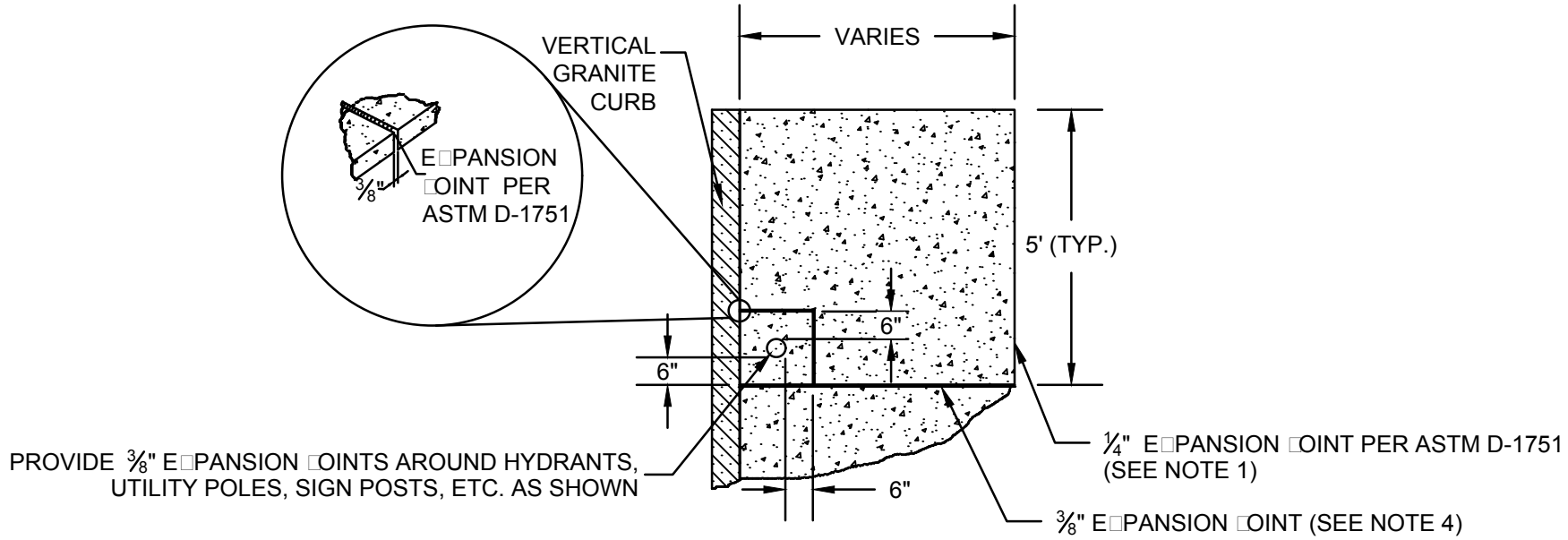

NOTES:

1. E□PANSION □OINTS SHALL BE INSTALLED AT BACK OF SIDEWALK STEPS, WALLS, BUILDINGS, AND OTHER STRUCTURES.

2. E□PANSION □OINTS AT BUILDINGS SHALL BE CAULKED.

3. E□PANSION □OINTS SHALL BE USED AT TRANSITIONS BETWEEN NEW AND E□ISTING SIDEWALK □OINTS.

4. E□PANSION □OINTS OF 3/8-IN THICK FOAM SHALL BE PLACED EVERY 30 FEET PERPENDICULAR TO CURB ALIGNMENT E□TENDING THROUGH THE SIDEWALK DEPTH.

SIDEWALK E□PANSION □OINT

CITY OF SOMERVILLE STANDARD SPECIFICATIONS AND DETAILS

SCALE: N.T.S.	DATE OF ISSUE: 5/18	SPEC. REF#: 02524	DETAIL NUMBER: R-1.2.0
REVISION:			

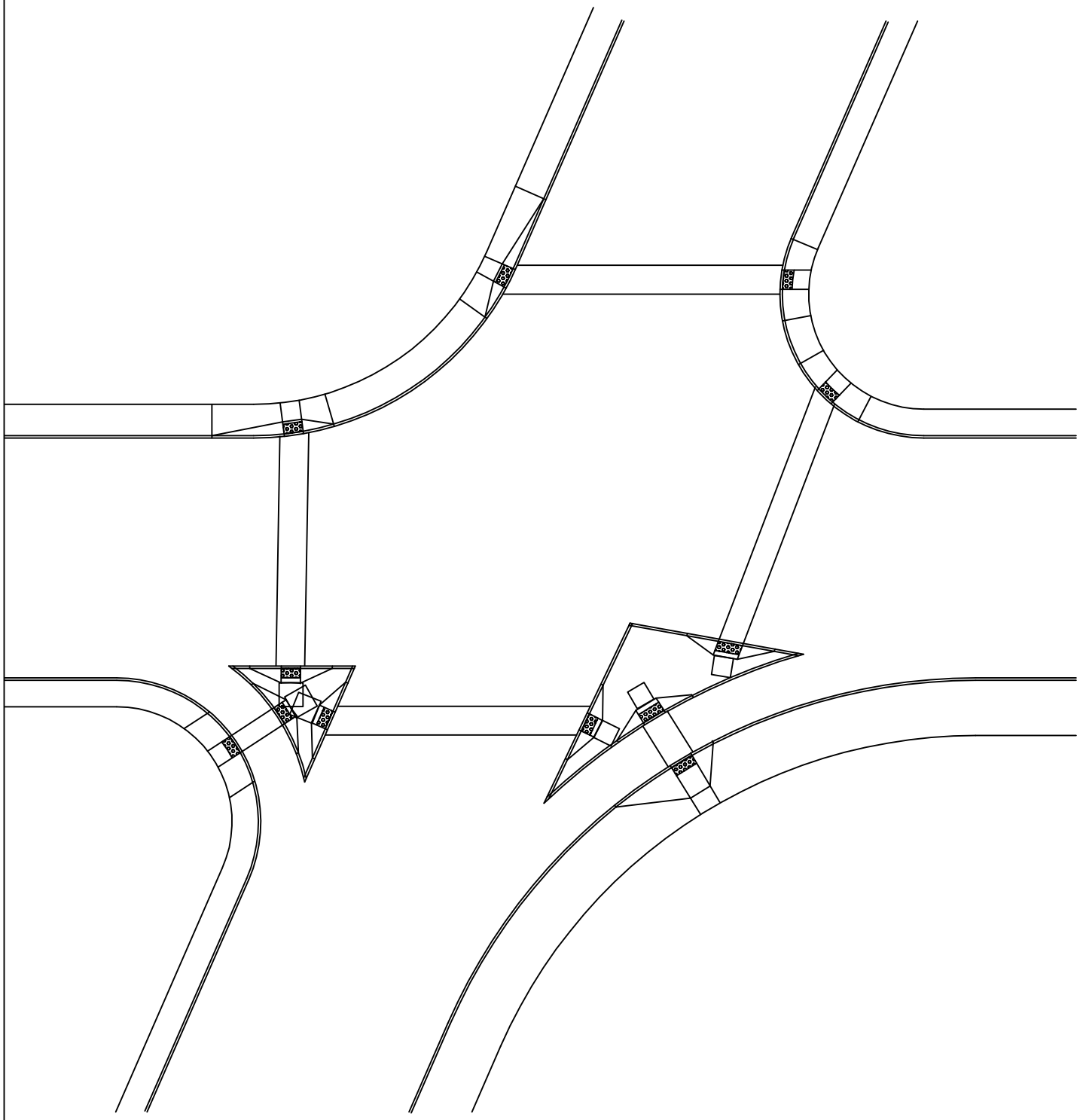

NOTES:

1. LEVEL LANDINGS CAN OVERLAP
2. ISLAND AREAS SUBJECT TO TRAVEL SHOULD BE TREATED AS PLAZAS "NOT MORE THAN 2% SLOPE IN ANY DIRECTION"
3. ALL RAMPS BY REGULATION MUST BE PERPENDICULAR TO THE CURB AT THE GUTTER
4. RAMPS SHOULD BE BOTH ALIGNED TOWARD THE RECEIVING RAMP AND WITHIN THE GENERALLY PREFERRED PEDESTRIAN PHASE OF TRAFFIC

massDOT Massachusetts Department of Transportation Highway Division

CONSTRUCTION STANDARDS

TYPICAL INTERSECTION CROSS WALK LAYOUT

DATE OF ISSUE
OCTOBER 2017

DRAWING NUMBER
E 107.1.0

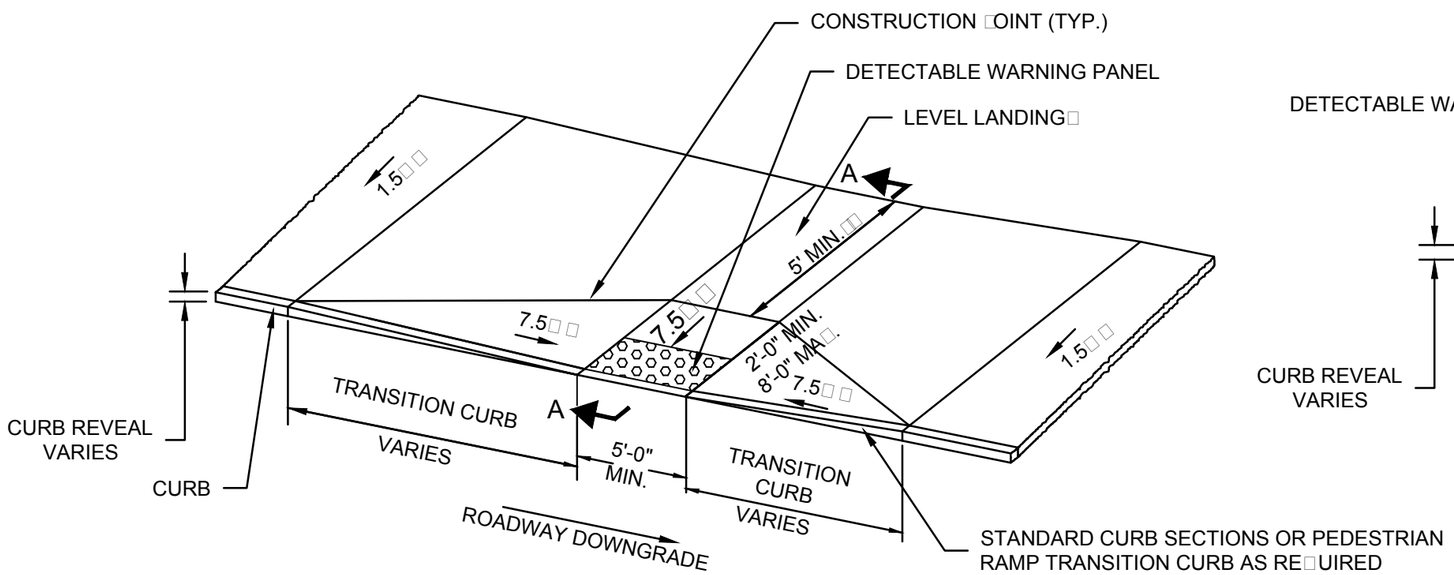

TYPE I

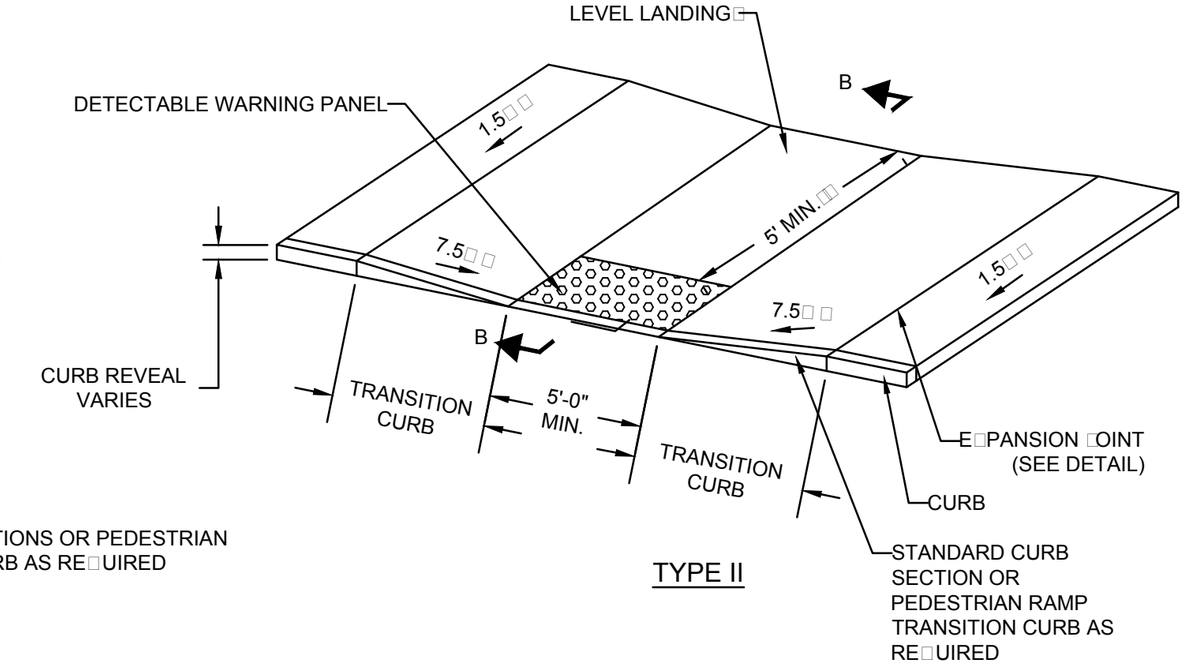

TYPE II

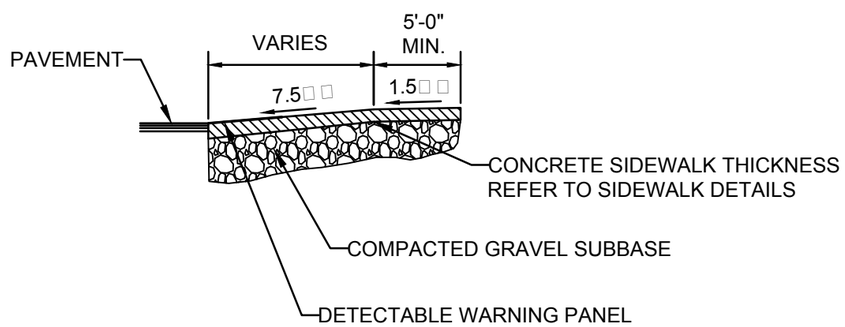

SECTION A-A

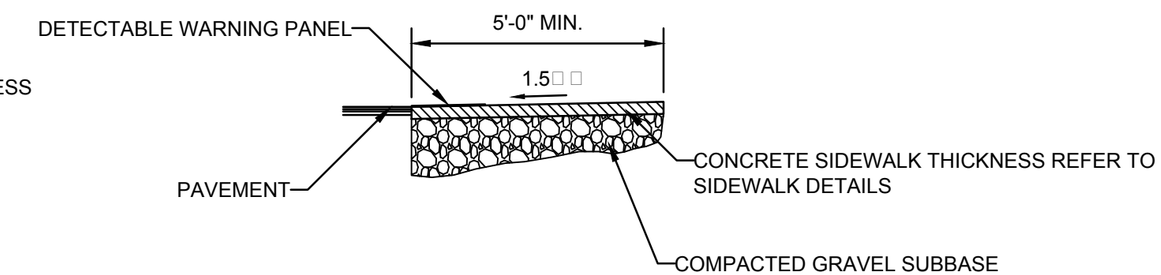

SECTION B-B

NOTES:
1. CONTRACTOR SHALL USE TYPE I OR TYPE II TO MATCH E□ISTING.

□ CONTRACTOR TO MEET ADA RE□UIREMENTS
MA□IMUM CROSS SLOPE □2.0□ (0□ TOLERANCE)
MA□IMUM TRANSITION RAMP SLOPE □8.3□ (0□ TOLERANCE)

□□ LEVEL LANDING MAY BE 4'-0" WIDE PROVIDED THERE IS NO OBSTRUCTION WITHIN 1'-0" AT THE BACK OF SIDEWALK

PEDESTRIAN RAMPS - VARIOUS TYPES

CITY OF SOMERVILLE STANDARD SPECIFICATIONS AND DETAILS

SCALE: N.T.S.	DATE OF ISSUE: 5/18	SPEC. REF#: 02524	DETAIL NUMBER: R-1.3.0
REVISION:			

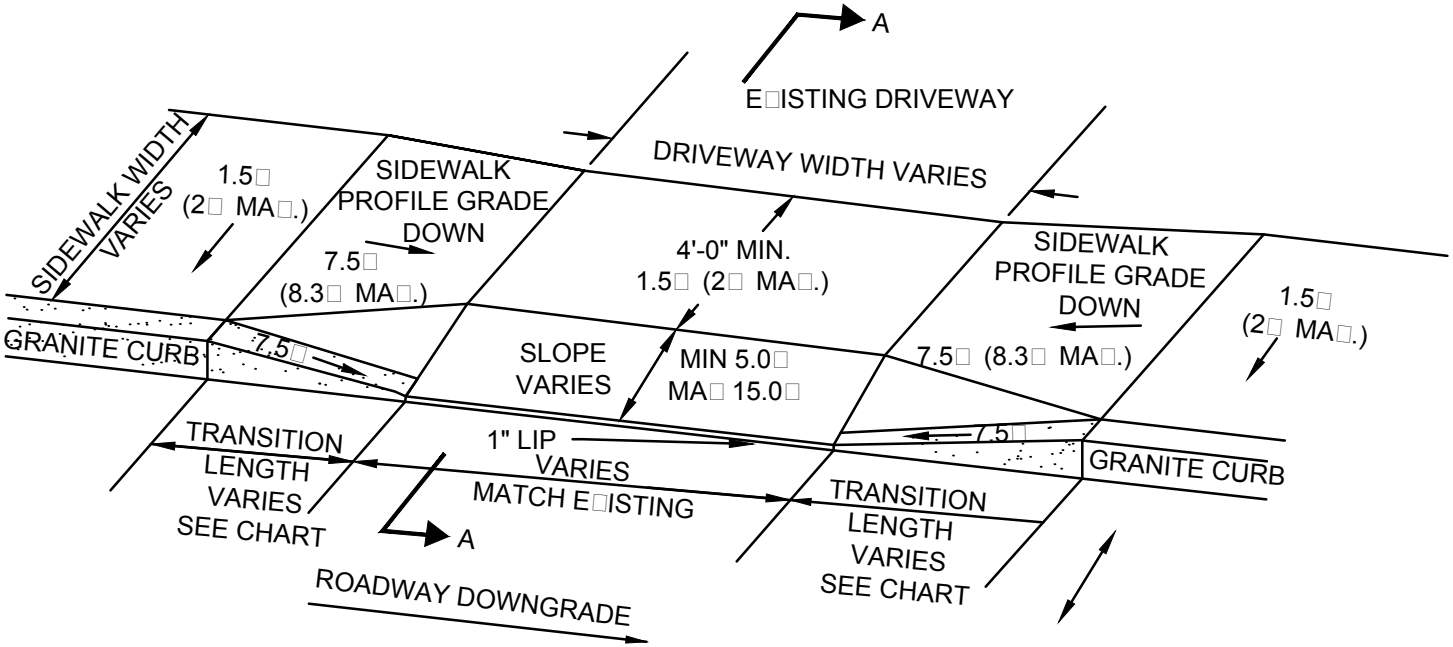

TRANSITION CHART □□

ROADWAY PROFILE GRADE	LENGTH OF CURB
0.00	6'-6"
□0.00 TO 0.01	7'-8"
□0.01 TO 0.02	9'-0"
□0.02 TO 0.03	11'-0"
□0.03 TO 0.04	14'-0"
□0.04	15'-0" MA□.

□□BASED ON A DESIGN SLOPE OF 7.5□ AND 6" CURB REVEAL.

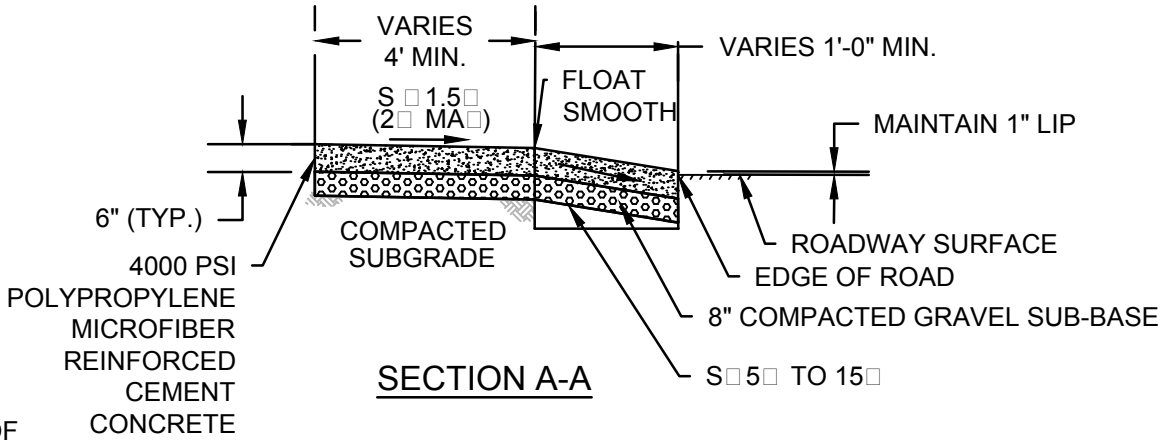

SECTION A-A

DRIVEWAY APRON - CONCRETE

CITY OF SOMERVILLE STANDARD SPECIFICATIONS AND DETAILS

SCALE: N.T.S.	DATE OF ISSUE: 5/18	SPEC. REF#: 02524	DETAIL NUMBER: R-4.3.0
REVISION:			

massDOT
Massachusetts Department of Transportation
Highway Division

CONSTRUCTION STANDARDS

WHEELCHAIR RAMP FOR ONE CONTINUOUS DIRECTION OF PEDESTRIAN TRAVEL

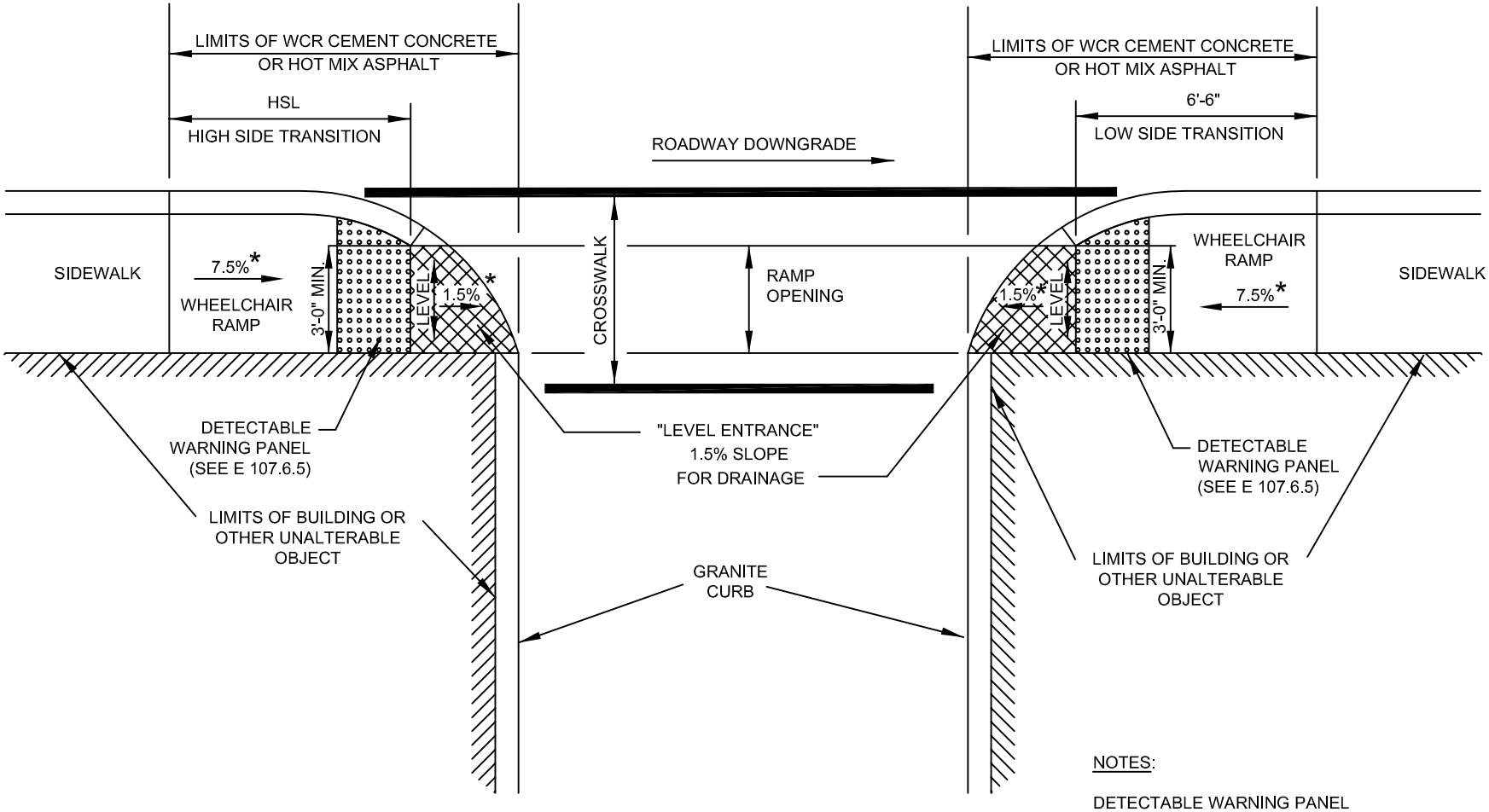

LEGEND

HSL = HIGH SIDE TRANSITION LENGTH (SEE E 107.9.0)

* = TOLERANCE FOR CONSTRUCTION ±0.5%

NOTES:

DETECTABLE WARNING PANEL LOCATED NOT LESS THAN 6" OR MORE THAN 24" FROM ROADWAY EDGE (GUTTER LINE). TRUNCATED DOMES TO BE ALIGNED WITH DIRECTION OF TRAVEL.

FOR DETAILS OF TRUNCATED DOMES SEE DRAWING E 107.6.5.

ROADWAY, GUTTER, AND FIRST 6" OF SIDEWALK TO BE ADJUSTED FOR FIELD CONDITIONS.

DATE OF ISSUE
OCTOBER 2017

DRAWING NUMBER
E 107.6.0

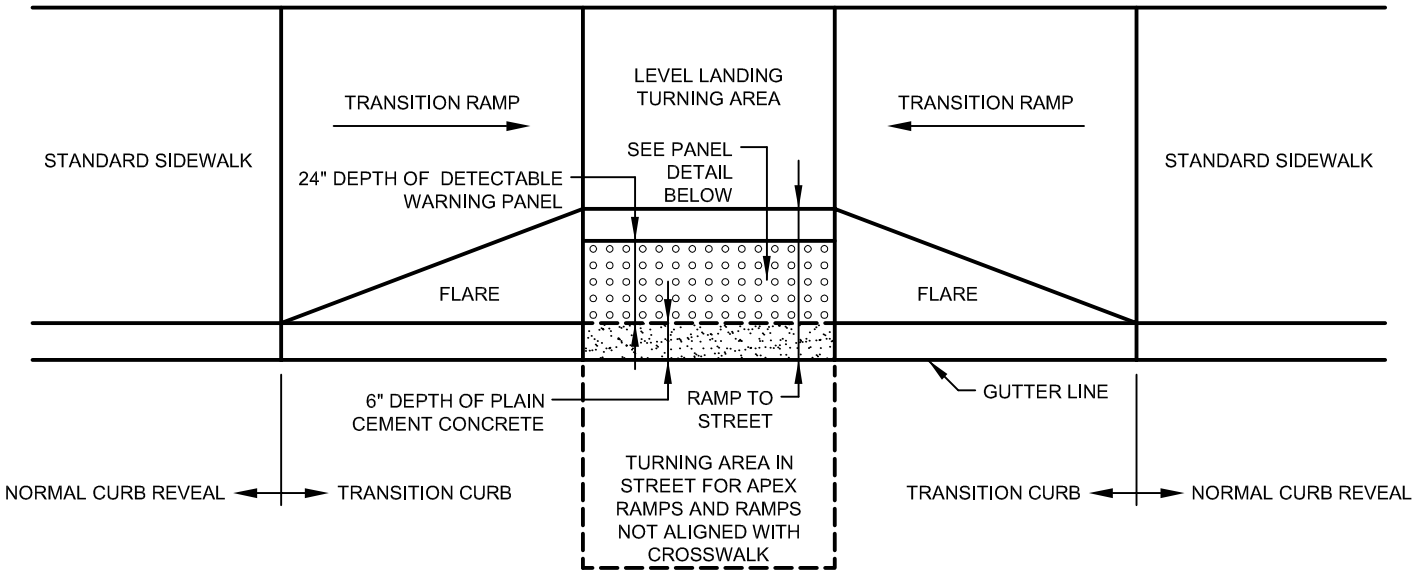

TYPICAL INSTALLATION

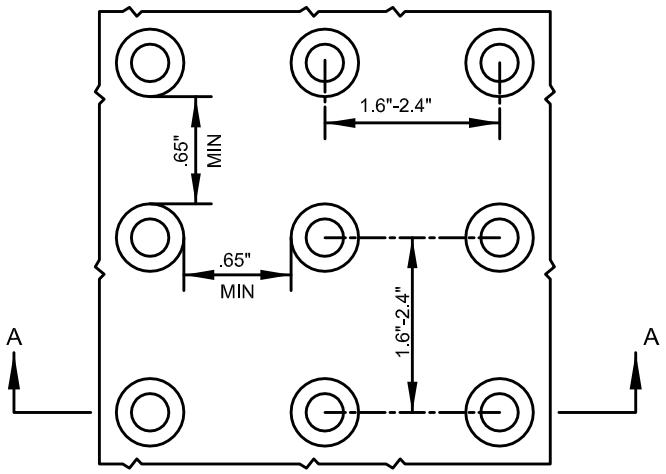

DETAIL OF DETECTABLE WARNING PANEL

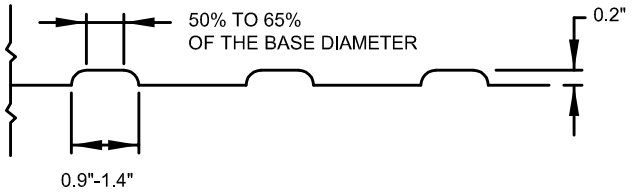

SECTION A-A

NOTE:

PANELS MAY BE CONCRETE PRECAST OR CAST IN PLACE OR OTHER SUITABLE MATERIAL PERMANENTLY APPLIED TO THE RAMP. DETECTABLE WARNING SURFACES SHALL CONTRAST VISUALLY WITH ADJACENT WALKING SURFACES EITHER LIGHT-ON-DARK, OR DARK-ON-LIGHT.

massDOT Massachusetts Department of Transportation Highway Division CONSTRUCTION STANDARDS	**DETECTABLE WARNING PANEL FOR WHEELCHAIR RAMPS AND STANDARD RAMP TERMINOLOGY**	DATE OF ISSUE OCTOBER 2017 DRAWING NUMBER **E 107.6.5**

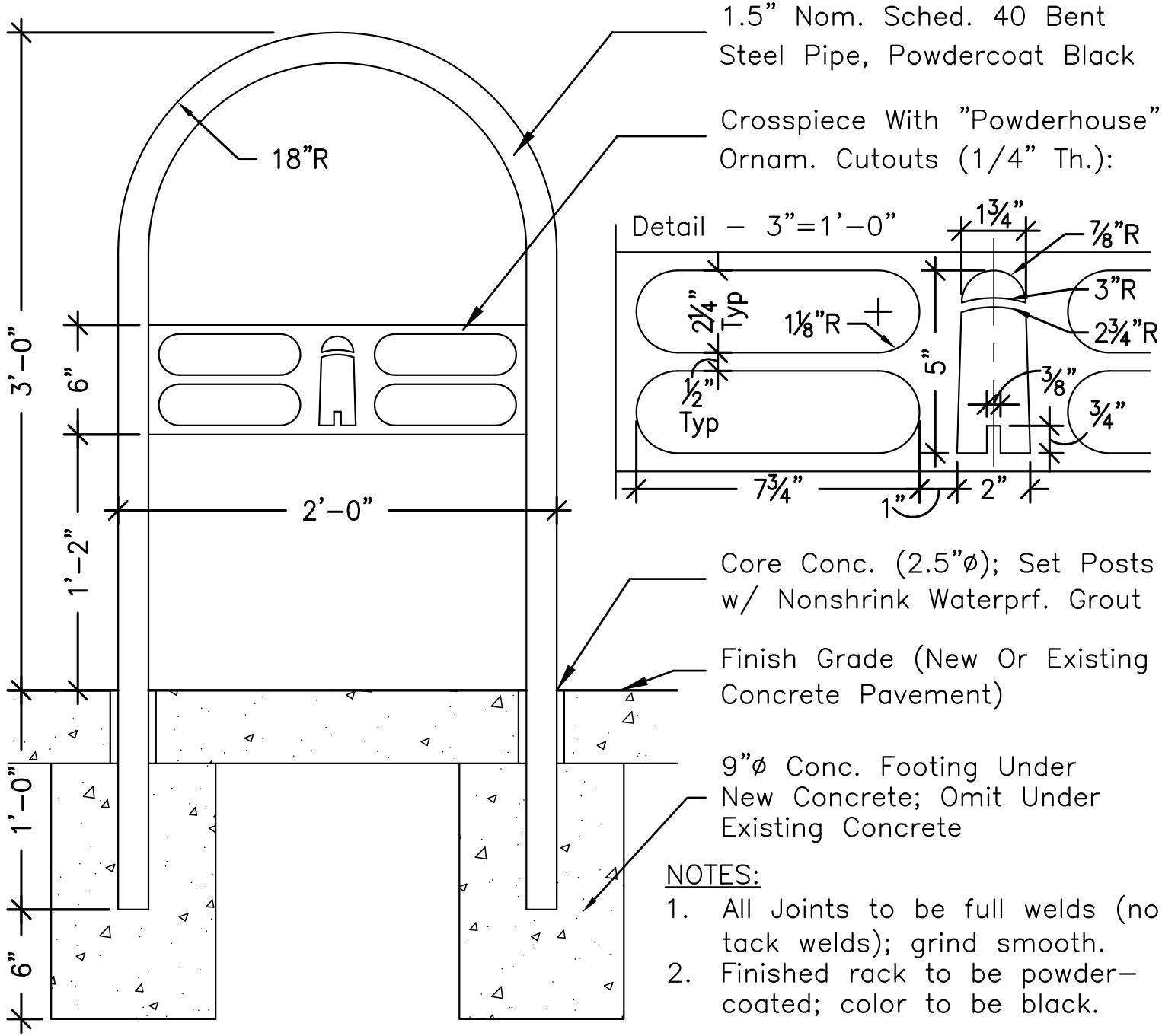

NOTES:

1. All Joints to be full welds (no tack welds); grind smooth.
2. Finished rack to be powder–coated; color to be black.

SOMERVILLE STANDARD BICYCLE RACK

Scale: 1–1/2" = 1'–0"

PEXCO, DAVIDSON TRAFFIC CONTROL PRODUCTS
3110 70TH AVENUE EAST
TACOMA, WA 98424
TOLL FREE: 1-877-335-4638
PHONE: (253) 284-8000
FAX: (253) 284-8080
www.davidsontraffic.com

- ☑ SELECT DESIRED POST LENGTH
  - ☐ 18" ☐ 36"
  - ☐ 24" ☐ 39"
  - ☐ 28" ☐ 42"
- ☑ SELECT DESIRED COLOR
  - ☐ WHITE
  - ☐ YELLOW
  - ☐ ORANGE
  - ☐ OTHER (SEE NOTE 3)
- ☑ SELECT DESIRED REFLECTIVE SHEETING
  - ☐ REFLEXITE (ORAFOL) AR1000
  - ☐ 3M 3300 SERIES HIGH INTENSITY PRISMATIC
- ☑ SELECT DESIRED SHEETING COLOR
  - ☐ WHITE
  - ☐ YELLOW
  - ☐ OTHER (SEE NOTE 3)

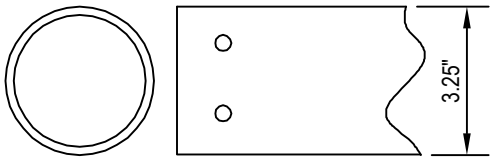

HOLES FOR BASE MOUNT

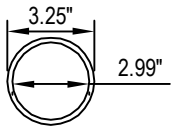

TOP VIEW

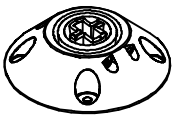

ISOMETRIC TOP

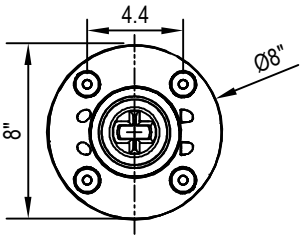

TOP VIEW

SIDE VIEW
SURFACE BASE

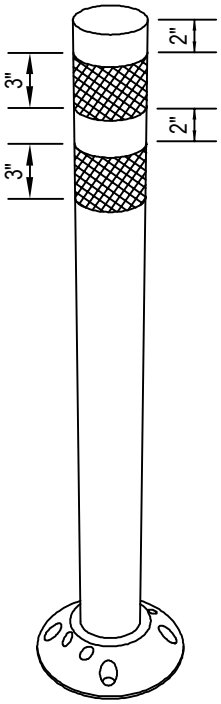

SHOWN WITH TYPICAL
REFLECTIVE TAPE APPLIED

NOTES:
1. INSTALLATION TO BE COMPLETED IN ACCORDANCE WITH MANUFACTURER'S SPECIFICATIONS.
2. DO NOT SCALE DRAWINGS.
3. POSTS AND REFLECTIVE SHEETING ARE AVAILABLE IN CUSTOM COLORS. CONTACT MANUFACTURER.
4. FLEXI-GUIDE POSTS CAN BE CUT TO ANY LENGTH YOU DESIRE. CALL FOR DETAILS.
5. POSTS MAY BE ORDERED W/ FACTORY APPLIED, HIGH INTENSITY OR PRISMATIC SUPER HIGH INTENSITY RETRO-REFLECTIVE SHEETING. SPECIFY TYPE, COLOR AND SIZE WHEN ORDERING.
6. CONTRACTORS NOTE: FOR PRODUCT AND COMPANY INFORMATION VISIT www.CADdetails.com/info REFERENCE NUMBER 644-038.

DP 200 FLEXIBLE CHANNELIZER POSTS

3-INCH ROUND CHANNELIZER POST

PROTECTED BY COPYRIGHT ©2015 CADDETAILS.COM LTD.
CADdetails.com